City of Omaha
2007 Plumbing Code

ARTICLE I	ADMINISTRATION	15
ARTICLE II	LICENSING	18
ARTICLE III	PERMITS AND INSPECTION	28
ARTICLE IV	DEFINITIONS AND ABBREVIATIONS	35
ARTICLE V	GENERALL REGULATIONS	45
ARTICLE VI	FIXTURE STANDARDS	52
ARTICLE VII	QUALITY AND WEIGHT OF MATERIALS	72
ARTICLE VIII	JOINTS AND CONNECTIONS	81
ARTICLE IX	SOIL AND WASTE	85
ARTICLE X	INDIRECT, CHEMICAL AND SPECIAL WASTES	91
ARTICLE XI	INTERCEPTORS	95
ARTICLE XII	RAINWATER DRAINAGE	103
ARTICLE XIII	VENT AND VENTING	106
ARTICLE XIV	TRAPS AND CLEANOUTS	112
ARTICLE XV	WATER SUPPLY AND DISTRIBUTION	116
ARTICLE XVI	WATER HEATERS	127
ARTICLE XVII	BUILDING AND STORM SEWERS	130
ARTICLE XVIII	WATER CONDITIONING APPLIANCES	138
ARTICLE XIX	LAWN SPRINKLER SYSTEM	140
ARTICLE XX	SWIMMING POOLS AND WATER FEATURES	142
ARTICLE XXI	PRIVATE SEWAGE TREATMENT SYSTEMS	145
ARTICLE XXII	UNIFORM SOLAR ENERGY CODE	155
ARTICLE XXIII	WATER CONSERVATION	155
APPENDIX O		158
ILLUSTRATION		162

ARTICLE I: ADMINISTRATION

DIVISION 1. GENERAL

Sec. 49-100 Extraterritorial application of chapter.
Sec. 49-101 Violation of chapter.
Sec. 49-102 Penalty.
Sec. 49-103 Failure to correct defective work.

DIVISION 2. PLUMBING BOARD

Sec. 49-104 Created; purpose.
Sec. 49-105 Composition.
Sec. 49-106 Appointment of members.
Sec. 49-107 Term of members.
Sec. 49-108 Bond of members.
Sec. 49-109 Compensation of members.
Sec. 49-110 Plumbing Board Advisor
Sec. 49-111 Removal of members from office.
Sec. 49-112 Vacancies.
Sec. 49-113 Chairman.
Sec. 49-114 Secretary.
Sec. 49-115 Meetings generally.
Sec. 49-116 Quorum.
Sec. 49-117 Rules and regulations--Generally.
Sec. 49-118 Rules for examinations.
Sec. 49-119 Appeal procedure.
Sec. 49-120 Record of complaints.
Sections 49-121—49-200 Reserved

ARTICLE II. LICENSING

DIVISION I. GENERAL

Sec. 49-201 Issuance of license.
Sec. 49-202 Reexamination after failure.
Sec. 49-203 License fees.
Sec. 49-204 Date of examination.
Sec. 49-205 Compliance with law.
Sec. 49-206 Misuse of name.
Sec. 49-207 Registration.
Sec. 49-208 Display of name on trucks.
Sec. 49-209 Display of license.
Sec. 49-210 Bond required.
Sec. 49-211 Expiration of license.
Sec. 49-212 Renewal of license.
Sec. 49-213 Temporary license.
Sec. 49-214 Revocation or suspension of license.
Sec. 49-215 Continuing education.
Sec. 49-216 Transfer of license.
Sections 49-217--49-219 Reserved

DIVISION 2. MASTER PLUMBERS

Sec. 49-220 License required

Sec. 49-221 Application for examination.
Sec. 49-222 Qualifications.
Sec. 49-223 Examination fee.
Sec. 49-224 Scope of examination.
Sec. 49-225 Retired master's license.
Sections 49-226 – 49-229 Reserved

DIVISION 3. JOURNEYMAN PLUMBERS

Sec. 49-230 License required.
Sec. 49-231 Scope of license.
Sec. 49-232 Qualifications.
Sec. 49-233 Application for license.
Sec. 49-234 Examination fee.
Sec. 49-235 Scope of examination.
Sec. 49-236 Identification badges.
Sec. 49-237 Retired journeyman's license.
Sections 49-238 – 49-239 Reserved

DIVISION 4. APPRENTICE PLUMBERS

Sec. 49-240 Registration required.
Sec. 49-241 Supervision.
Sec. 49-242 Registration information.
Sec. 49-243 Registration fees.
Sec. 49-244 Certification of apprenticeship programs
Sec. 49-245 Credit for experience obtained outside the jurisdiction of the City of Omaha.
Sec. 49-246 Group apprenticeship programs.
Sec. 49-247 Apprenticeship classroom instructional programs.
Sec. 49-248 Revocation or suspension of apprentice card.
Sec. 49-249 Expiration of registration.

DIVISION 5. SEWER LAYERS

Sec. 49-250 License required.
Sec. 49-251 Application for license; examination required.
Sec. 49-252 Scope of license.
Sec. 49-253 Examination fee.
Sec. 49-254 Scope of examination.
Sec. 49-255 License fee.
Sections 49-256--259 Reserved

DIVISION 6. WATER CONDITIONING CONTRACTOR'S AND INSTALLER'S LICENSES

Sec. 49-260 License Required.
Sec. 49-261 Scope of license.
Sec. 49-262 Application; qualifications.
Sec. 49-263 Examination fee.
Sec. 49-264 Scope of examination.
Sec. 49-265 License fees.
Sections 49-266--269 Reserved

DIVISION 7. LAWN SPRINKLER CONTRACTOR LICENSE
Sec. 49-270 License Required.

Sec. 49-271 Qualifications.
Sec. 49-272 Examination fee.
Sec. 49-273 Scope of examination.
Sec. 49-274 License fee.
Sec. 49-275 Scope of license.
Sections 49-276--299 Reserved

ARTICLE III. PERMITS AND INSPECTION

DIVISION 1. PERMITS

Sec. 49-300 Required.
Sec. 49-301 Qualifications to obtain a permit.
Sec. 49-302 Issuance of permits restricted.
Sec. 49-303 Exception for minor repair work.
Sec. 49-304 Application.
Sec. 49-305 Plans and specifications.
Sec. 49-306 Fees.
Sec. 49-307 Commencing work without permit.
Sec. 49-308 Second permit required in case of completion of work by different plumber.
Sections 49-309--49-319 Reserved

DIVISION 2. INSPECTIONS

Sec. 49-320 Required.
Sec. 49-321 Exception.
Sec. 49-322 Qualifications of inspectors.
Sec. 49-323 Conflict of interest of inspectors.
Sec. 49-324 Duties and authority of inspectors.
Sec. 49-325 Investigation and prosecution of violations.
Sec. 49-326 Right of entry of inspectors.
Sec. 49-327 Notification that work is ready for inspection.
Sec. 49-328 Final inspection.
Sec. 49-329 Work not to be covered before inspection.
Sec. 49-330 Inspections of sanitary and storm sewers.
Sec. 49-331 Correction of defective work; reinspections.
Sec. 49-332 Certificate of inspection.
Sections 49-333--49-339 Reserved

DIVISION 3. TESTING

Sec. 49-340 Required tests.
Sec. 49-341 Testing materials and labor to be furnished by permittee.
Sec. 49-342 Testing of waste, vent and rainwater systems.
Sec. 49-343 Testing of pressure soil, waste and sewers
Sec. 49-344 Water supply system test.
Sec. 49-345 Unsanitary premises--Notice to correct conditions; abatement by plumbing inspector; testing of plumbing and drainage system.
Sec. 49-346 Records.
Sec. 49-347 Manufactured homes.
Sec. 49-348 Pre-fabricated buildings.
Sec. 49-349 Test Gauges.
Sections 49-350--49-399 Reserved

ARTICLE IV. DEFINITIONS AND ABBREVIATIONS

Sec. 49-400 Definitions.
Sec. 49-401 Abbreviations
Sections 49-402—49-499 Reserved

ARTICLE V. GENERAL REGULATIONS

Sec. 49-501 Disposal of wastes.
Sec. 49-502 Connection of fixtures to soil or waste system.
Sec. 49-503 Installation of used equipment.
Sec. 49-504 Prohibited fittings.
Sec. 49-505 Fittings for change in direction.
Sec. 49-506 Minimum slopes for horizontal piping.
Sec. 49-507 Support of piping aboveground.
Sec. 49-508 Dead ends; soil or waste lines for future use.
Sec. 49-509 Protection of pipes from breakage or corrosion.
Sec. 49-510 Material to be used within four feet of the building.
Sec. 49-511 Fixture Openings installed for future use.
Sec. 49-512 Special application of 90-degree ells.
Sec. 49-513 Floor drains in basements.
Sec. 49-514 Protection of footings.
Sec. 49-515 Types of materials for plumbing and drainage systems.
Sec. 49-516 Separate plumbing and drainage systems.
Sec. 49-517 Sewer and water service locations.
Sec. 49-518 Protection of piping against freezing.
Sec. 49-519 Workmanship.
Sec. 49-520 Location of soil, waste, vent or water pipe from electric panels.
Sec. 49-521 Protection of piping passing through studs, plates and joists.
Sec. 49-522 Pipe and valve identification.
Sec. 49-523 Label spacing.
Sec. 49-524 Lettering size.
Sec. 49-525 Typical system requirements.
Sections 49-526—49-594 Reserved
Sec. 49-595 Incorporation of figures by reference.
Sections 49-596 –49-599 Reserved

ARTICLE VI. FIXTURE STANDARDS

Sec. 49-600 Access for the disabled.
Sec. 49-601 Temporary toilet facilities for buildings under construction.
Sec. 49-602 Water supply protection.
Sec. 49-603 Overflows
Sec. 49-604 Access to concealed connections and equipment.
Sec. 49-605 Automatic clothes washers.
Sec. 49-606 Bathtubs.
Sec. 49-607 Bidets.
Sec. 49-608 Dishwashing machines.
Sec. 49-609 Drinking fountains and water coolers.
Sec. 49-610 Emergency showers and eyewash stations.
Sec. 49-611 Floor drains.
Sec. 49-612 Trench drains.
Sec. 49-613 Floor sinks.
Sec. 49-614 Garage drains.

Sec. 49-615 Food waste grinders.(garbage disposal)
Sec. 49-616 Garbage can washers.
Sec. 49-617 Laundry sinks.
Sec. 49-618 Lavatories.
Sec. 49-619 Mop sinks.
Sec. 49-620 Showers
Sec. 49-621 Residential sinks.
Sec. 49-622 Service sinks.
Sec. 49-623 Urinals.
Sec. 49-624 Water closets.
Sec. 49-625 Flushing devices for water closets and urinals.
Sec. 49-626 Special plumbing fixtures.
Sec. 49-627 Faucets and fittings.
Sec. 49-628 Ventilation of rooms containing plumbing fixtures.
Sec. 49-629 Establishments where food or drink is manufactured, sold or distributed.
Sec. 49-630 Toilet rooms for two sexes.
Sec. 49-631 Unisex toilet rooms.
Sec. 49-632 Reserved
Sec. 49-633 Minimum facilities for dwelling units, townhouses or apartments.
Sec. 49-634 Minimum facilities for occupied nonresidential buildings.
Sec. 49-635 Right of use of toilet rooms in businesses by customers.
Sec. 49-636 Fixture requirement tables.
Sec. 49-637 Space requirement for non-handicapped plumbing fixtures.
Sections 49-638--49-699. Reserved.

ARTICLE VII. QUALITY AND WEIGHT OF MATERIALS.

Sec. 49-700 Condition of materials.
Sec. 49-701 Minimum standards.
Sec. 49-702 Rainwater leaders.
Sec. 49-703 Traps and tubing for commercial installations.
Sec. 49-704 Traps and tubing for dwelling units and townhouses.
Sec. 49-705 Increasers and reducers.
Sec. 49-706 Backwater valves and gate valves installed in building drain or building sewers.
Sec. 49-707 Cleanouts and test tees.
Sec. 49-708 Relief valves.
Sec. 49-709 Closet floor flanges.
Sec. 49-710 Combination ferrules.
Sec. 49-711 Durham system.
Sec. 49-712 All-copper soil, waste and vent installations.
Sec. 49-713 Water piping.
Sec. 49-714 Brass and copper pipe.
Sec. 49-715 Copper tube sweat fittings.
Sec. 49-716 Water service fittings.
Sec. 49-717 Flashing
Sec. 49-718 Threaded fittings.
Sec. 49-719 Hub and spigot cast-iron soil pipe.
Sec. 49-720 Hubless cast-iron soil pipe.
Sec. 49-721 Plastic pipe and fittings.
Sec. 49-722 High Density Polyethylene Plastic Pipe (HDPE) SDR 17 for sanitary and storm sewers.
Sections 49-723—49-799 Reserved.

ARTICLE VIII. JOINTS AND CONNECTIONS
Sec. 49-800 Tightness.

Sec. 49-801 Caulked joints.
Sec. 49-802 Threaded joints.
Sec. 49-803 Copper tube grooved joining system.
Sec. 49-804 Galvanized grooved joining system.
Sec. 49-805 Soldered or sweat joints.
Sec. 49-806 Slip joints.
Sec. 49-807 Unions.
Sec. 49-808 No-hub couplings.
Sec. 49-809 Steel or wrought iron to cast iron bell and spigot pipe.
Sec. 49-810 Copper to cast-iron, steel or wrought iron pipe.
Sec. 49-811 Brass or copper tubing to lead.
Sec. 49-812 Fixture water supply connection.
Sec. 49-813 Floor and wall fixture settings.
Sec. 49-814 Access to supply and waste connections.
Sec. 49-815 Sisson joints.
Sec. 49-816 Compression joints.
Sec. 49-817 Polyethylene.
Sec. 49-818 Chlorinated polyvinyl chloride.
Sec. 49-819 Copper press fit fittings.
Sec. 49-820 Pipe and fittings for sanitary and storm sewers.
Sec. 49-821 High density polyethylene plastic pipe (HDPE) SDR 17 for sanitary sewers.
Sections. 49-822--49-820. Reserved.

ARTICLE IX. SOIL AND WASTE

Sec. 49-900 Joints and connections.
Sec. 49-901 Aboveground piping within buildings.
Sec. 49-902 Underground piping within buildings.
Sec. 49-903 Fixture unit values--Generally.
Sec. 49-904 Rated fixtures.
Sec. 49-905 Unrated fixtures.
Sec. 49-906 Cooling tower drains.
Sec. 49-907 Soil, waste and vent stacks generally.
Sec. 49-908 Soil and waste stack sizes.
Sec. 49-909 Capacities of horizontal building drains and building sewers.
Sec. 49-910 Branch soil and waste lines.
Sec. 49-911 Soil and waste systems located below the building sewer or public sewer.
Sec. 49-912 Individual wastewater pumping system.
Sec. 49-913 Waste water pumping system servicing more than one fixture.
Sec. 49-914 Subsoil drains.
Sec. 49-915 Sump Pumps in elevator pits
Sections 49-916—49-999 Reserved

ARTICLE X. INDIRECT, CHEMICAL AND SPECIAL WASTES.

Sec. 49-1000 Indirect waste connections.
Sec. 49-1001 Air gap for waste pipes.
Sec. 49-1002 Receiving fixtures.
Sec. 49-1003 Indirect waste pipe sizes.
Sec. 49-1004 Indirect waste requirements.
Sec. 49-1005 Chemical wastes.
Sec. 49-1006 Bar and soda waste.
Sections 49-1007--49-1099 Reserved

ARTICLE XI. INTERCEPTORS.

DIVISION 1. GENERAL

Sec. 49-1100 Industrial wastes generally.
Sec. 49-1101 Required.
Sec. 49-1102 Restricted uses

DIVISION 2. EXTERIOR GREASE INTERCEPTOR COMMERCIAL KITCHENS

Sec. 49-1103 Commercial kitchens.
Sec. 49-1104 Required.
Sec. 49-1105 Not required, provisions for future installation.
Sec. 49-1106 Material requirements
Sec. 49-1107 Structural requirements
Sec. 49-1108 Enzymatic units
Sec. 49-1109 Exterior grease interceptors.
Sec. 49-1110 Inspection manhole..
Sec. 49-1111 Maintained.
Sec. 49-1112 Abandonment of a exterior grease interceptor
Sec. 49-1113 Specific criteria in determination of grease interceptor size
Sec. 49-1114 Abandonment of an exterior grease interceptors.
Sec 49-1115 Automatic Grease Removal Device Standards
Sec. 49-1116 When Automatic Grease Removal Devices are Allowed.
Sec. 49-1117 Installation of Automatic Grease Removal Devices.
Sec. 49-1118 Automatic Grease Removal
Sections 49-1119—49-1129 Reserved.

DIVISION 3. INDIVIDUAL GREASE TRAPS.

Sec. 49-1130 Standards
Sec. 49-1131 When allowed
Sec. 49-1132 Grease traps.
Sec. 49-1133 Grease traps sizing.

DIVISION 4. INTERCEPTORS FLAMMABLE.

Sec. 49-1140 Type I sealed interceptors for flammable waste.
Sec. 49-1141 Type I interceptor required for certain uses.
Sec. 49-1142 Other drains requiring type I interceptor.
Sec. 49-1143 Type II interceptors for nonflammable waste.
Sec. 49-1144 Type III mud and sand interceptors.
Sec. 49-1145 Type IV steam and hot water interceptors.
Sec. 49-1146 Combination type I and type III interceptor.
Sec. 49-1147 Drains in multiple-level public garages.
Sec. 49-1148. Drains receiving animal waste.
Sec. 49-1149 Multiple car wash bays.
Sec. 49-1150 Special wastes.
Sections. 49-1151--49-1199 Reserved.

ARTICLE XII. RAINWATER DRAINAGE.

Sec. 49-1200 Required.
Sec. 49-1201 Prohibited drainage.
Sec. 49-1202 Materials.
Sec. 49-1203 Connection of exterior rainwater leader.

Sec. 49-1204 Testing of rainwater leaders.
Sec. 49-1205 Connections to building drain.
Sec. 49-1206 Roof drains.
Sec. 49-1207 Vertical wall areas.
Sec. 49-1208 Vertical rainwater leaders.
Sec. 49-1209 Horizontal rainwater drains.
Sec. 49-1210 Overflow drains and scuppers.
Sec. 49-1211 Roof drainage water not to flow over adjacent property.
Secs. 49-1212--49-1299 Reserved.

ARTICLE XIII. VENT AND VENTING.

Sec. 49-1300 Materials.
Sec. 49-1301 Individual vents required.
Sec. 49-1302 Stack vents.
Sec. 49-1303 Vent stacks.
Sec. 49-1304 Vent pipe grade.
Sec. 49-1305 Location of vent terminals
Sec. 49-1306 Sizes of stacks in roof.
Sec. 49-1307 Connection of vent pipe to soil or waste pipe.
Sec. 49-1308 A vent piped in such a manner as to become a waste
Sec. 49-1309 Vents for water closets and similar fixtures.
Sec. 49-1310 When no vent or revent required.
Sec. 49-1311 Special venting floor drains and area drains.
Sec. 49-1312 Stack venting.
Sec. 49-1313 Dual vents.
Sec. 49-1314 Return vents.
Sec. 49-1315 Relief Vents
Sec. 49-1316 Offset vents.
Sec. 49-1317 Prohibited vent connections.
Sec. 49-1318 Fixture vent pipe sizes.
Sec. 49-1319 Size of vent piping.
Sec. 49-1320 Battery venting.
Sec. 49-1321 Vents for future use.
Sec. 49-1322 Wet venting.
Sec. 49-1323 Revents.
Sec. 49-1324 Vents for waste interceptors
Sec. 49-1325 Air admittance valves.
Secs. 49-1326--49-1399 Reserved

ARTICLE XIV. TRAPS AND CLEANOUTS

DIVISION 1. TRAPS

Sec. 49-1400 Fixtures to be separately trapped; exceptions.
Sec. 49-1401 Trap seals.
Sec. 49-1402 Trap installation.
Sec. 49-1403 Prohibited traps.
Sec. 49-1404 Double traps.
Sec. 49-1405 Crown vented traps.
Sec. 49-1406 Distance of vent pipe to trap.
Sec. 49-1407 Distance of trap from fixture.
Sec. 49-1408 Running traps.
Secs.49-1409--49-1419 Rese

DIVISION 2. CLEANOUTS

Sec. 49-1420 Building drain cleanouts.
Sec. 49-1421 Building sewer cleanouts.
Sec. 49-1422 Rainwater leader cleanouts.
Secs. 49-1423--49-1499. Reserved.

ARTICLE XV. WATER SUPPLY AND DISTRIBUTION

Sec. 49-1500 Quality of water.
Sec. 49-1501 Nonpotable water.
Sec. 49-1502 Cross-connections generally.
Sec. 49-1503 Standards for devices to control cross-connections.
Sec. 49-1504 Testing of new and existing backflow prevention devices.
Sec. 49-1505 Maintenance and inspection of backflow prevention devices.
Sec. 49-1506 Location of reduced pressure principle backflow devices.
Sec. 49-1507 Fire suppression systems.
Sec. 49-1508 Drains for backflow preventer.
Sec. 49-1509 Master backflow preventers.
Sec. 49-1510 Private wells.
Sec. 49-1511 Device selection table.
Sec. 49-1512 Protection against freezing.
Sec. 49-1513 Cleaning and sterilization.
Sec. 49-1514 Used water return.
Sec. 49-1515 Water hammer.
Sec. 49-1516 Meters
Sec. 49-1517 Meter bypass
Sec. 49-1518 Water service.
Sec. 49-1519 Valve before the meter.
Sec. 49-1520 Pressure reducing valve.
Sec. 49-1521 Minimum water pressure.
Sec. 49-1522 Equivalent fixture units.
Sec. 49-1523 Water pipe sizing for dwelling units and townhouses.
Sec. 49-1524 Water pipe sizing for commercial buildings.
Secs. 49-1525--49-1599. Reserved.

ARTICLE XVI. WATER HEATERS

Sec. 49-1600 Permit and inspection.
Sec. 49-1601 Water heaters.
Sec. 49-1602 Water heaters temperatures setting.
Sec. 49-1603 Pressure rating.
Sec. 49-1604 Relief valves required; settings.
Sec. 49-1605 Installation of relief valves.
Sec. 49-1606 Discharge of relief valves.
Sec. 49-1607 Temperature controls.
Sec. 49-1608 Thermal expansion devices.
Sec. 49-1609 Circulating pipe between heating element and storage tank.
Sec. 49-1610 Steam pressure.
Sec. 49-1611 Water heater vents.
Sec. 49-1612 Location of water heaters.
Sec. 49-1613 Noncombustion water heaters.
Sec. 49-1614 Fuel lines.
Sec. 49-1615 Leveling of heater.

Sec. 49-1616 Water heater ASME rated.
Sections 49-1616--49-1699 Reserved.

ARTICLE XVII. BUILDING AND STORM SEWERS.

DIVISION 1. GENERALLY

Sec. 49-1700 Applicability of requirements.
Sec. 49-1701 Safety standards.
Sec. 49-1702 Trenches in streets or alleys.
Sec. 49-1703 Barricades, guards and warning lights.
Sec. 49-1704 Work in streets not to be delayed.
Sec. 49-1705 Permit required.
Sec. 49-1706 Record of permits.
Sec. 49-1707 Persons eligible to make or repair connections.
Sec. 49-1708 Furnishing of information concerning location of public sewer.
Sec. 49-1709 Abandoned connections.
Sec. 49-1710 Time limit for connection in new sewer districts.
Sec. 49-1711 Consent required for connection when sewer has not been completed and accepted.
Sec. 49-1712 Connection charge.
Sec. 49-1713 Repair of defective work.
Secs. 49-1714--49-1727 Reserved

DIVISION 2. CONSTRUCTION SPECIFICATIONS

Sec. 49-1728 Compliance with division.
Sec. 49-1729 Minimum depth of building sewer.
Sec. 49-1730 Slope of building sewer.
Sec. 49-1731 Size of building sewer.
Sec. 49-1732 Sewer materials.
Sec. 49-1733 Installation of thermoplastic pipe for sewers.
Sec. 49-1734 Storm sewer in public right-of-ways.
Sec. 49-1735 Transformer vaults.
Sec. 49-1736 Storm water connections
Sec. 49-1737 Minimum size of city main for storm drains connection.
Sec. 49-1738 Discharge of harmful substances into a storm drain.
Sec. 49-1739 Specifications for sewer taps and repairs.
Sec. 49-1740 Private Sewers.
Sec. 49-1741 Recycled Portland cement concrete
Sec. 49-1742 Pipe Bursting Technique and materials.
Sections 49-1743—49-1799 Reserved.

ARTICLE XVIII. WATER CONDITIONING APPLIANCES.

Sec. 49-1800 Compliance with article.
Sec. 49-1801 Permit required.
Sec. 49-1802 Exception to permit requirement.
Sec. 49-1803 Materials.
Sec. 49-1804 Water softeners.
Sec. 49-1805 Piping.
Sec. 49-1806 Sizing of water softeners for residential premises.
Sec. 49-1807 Point-of-use appliances.
Sections 49-1808—49-1899 Reserved.

ARTICLE XIX. LAWN SPRINKLER SYSTEM.

Sec. 49-1900 Compliance with article.
Sec. 49-1901 Permit required
Sec. 49-1902 Connection to water distribution system.
Sec. 49-1903 Valves and controls.
Sec. 49-1904 Materials and specifications.
Sec. 49-1905 Electrical system.
Sec. 49-1906 Minimum design standards
Secs. 49-1907-- 49-1999 Reserved

ARTICLE XX. SWIMMING POOLS AND WATER FEATURES

Division I Swimming Pools

Sec. 49-2000 Permit; general standards.
Sec. 49-2001 Required equipment.
Sec. 49-2002 Circulating piping.
Sec. 40-2003 Valves.
Sec. 49-2004 Pipe and fittings.
Sec. 49-2005 Connection to potable water supply.
Sec. 49-2006 Discharge of waste.
Sec. 49-2007 Watertight construction.
Sec. 49-2008 Heaters.
Sec. 49-2009 Tests.
Sec. 49-2010 Equipment foundations.
Sec. 49-2011 Hydrostatic devices.
Sec. 49-2012 Material and equipment standards.
Sec. 49-2013 Pipe and valve markings.
Sections. 49-2014--49-2039. Reserved.

Division II Water Features

Sec. 49-2040 Defined
Sec. 49-2041 Permit required.
Sec. 49-2042 Testing and inspection.
Sec. 49-2043 Materials
Sec. 49-2044 Circulating piping.
Sec. 49-2045 Connection to potable water supply.
Sec. 49-2046 Discharge of waste.
Sec. 49-2047 Watertight construction.
Sec. 49-2048 Pipe and valve identification
Sec. 49-2049. Equipment foundations.
Sec. 49-2050 Discharge onto public or private property.
Sections. 49-2051--49-2099. Reserved.

ARTICLE XXI. PRIVATE SEWAGE TREATMENT SYSTEMS.

DIVISION I. GENERALLY

Sec. 49-2100 Application of Article.
Sec. 49-2101 Definitions.
Sec. 49-2102 Sanitation Requirements.
Sec. 49-2103 Privies, Cesspools Prohibited Private Sewer Connections Generally.
Sec. 49-2104 Floor drains.

Sec. 49-2105 Inspections.
Sec. 49-2106 Conflict with State Health Department Requirements.
Sec. 49-2107 Conflicting Code Provisions.

DIVISION II. CONSTRUCTION REQUIREMENT.

Sec. 49-2108 Application of division.
Sec. 49-2109 Completion of construction; notice, inspection.
Sec. 49-2110 Final grade construction.
Sec. 49-2111 Location generally.
Sec. 49-2112 Sewer line.
Sec. 49-2113 Septic tanks materials.
Sec. 49-2114 Septic tank cover.
Sec. 49-2115 Septic tank location.
Sec. 49-2116 Private Sewage Treatment System Setbacks.
Sec. 49-2117 Septic tanks connection.
Sec. 49-2118 Septic tanks capacity.
Sec. 49-2119 Distribution box.
Sec. 49-2120 Effluent pipe.
Sec. 49-2121 Distribution box elevation.
Sec. 49-2122 Dosing chamber/when required.
Sec. 49-2123 Dosing chamber/specifications.
Sec. 49-2124 Absorption area minimum.
Sec. 49-2125 Absorption field/percolation tests.
Sec. 49-2126 Absorption trench.
Sec. 49-2127 Single family absorption area.
Sec. 49-2128 Absorption area design criteria.
Sec. 49-2129 Absorption field criteria.
Sec. 49-2130 Seepage beds requirements.
Sec. 49-2131 Surface water setbacks.
Sec. 49-2132 Groundwater minimum.
Sec. 49-2133 Grease trap.
Sec. 49-2134 Abandonment of septic tanks.
Sec. 49-2135 Commercial installer requirements.

DIVISION III. PERMITS

Sec. 49-2136 Required.
Sec. 49-2137 Flood plain.
Sec. 49-2138 Application.
Sec. 49-2139 Contents of plan.
Sec. 49-2140 Fees.
Sec. 49-2141 Issuance.
Sec. 49-2142 Expiration.
Secs. 49-2143--49-2199 Reserved.

ARTICLE XXII. UNIFORM SOLAR ENERGY CODE

Sec. 49-2200. Adopted; amendments.

ARTICLE XXIII WATER CONSERVATION

DIVISION 1 GRAY WATER

Sec. 49-2300 Reservoir.
Sec. 49-2301 Installation.

Sec. 49-2302 Conversion of gray water supply to a potable supply.
Sec. 49-2303 Filtration.
Sec. 49-2304 Disinfection.
Sec. 49-2305 Identification.
Sec. 49-2306 Coloring
Sec. 49-2307 Limitations on use.
Sec. 49-2308-49-2329 Reserved

DIVISION II RAINWATER HARVESTING

Sec. 49-2330 General.
Sec. 49-2331 Reservoir.
Sec. 49-2332 Installation.
Sec. 49-2333 Filtration.
Sec. 49-2334 Identification.
Sec. 49-2335-49-2399 Reserved

ARTICLE I: ADMINISTRATION

DIVISION 1. General

Sec. 49-100. Extraterritorial application of chapter.
The provisions of this chapter shall be controlling as to all subjects contained herein in the city and in the area within three miles of the corporate limits.

Sec. 49-101. Violation of chapter.
It shall be unlawful for any person to cause or permit any job of plumbing or drain laying, make any connection with or opening into any private or public sewer or water distribution system, or do any plumbing in connection with any property owned, managed, or controlled by such person unless the plumber doing said work has been licensed and registered as required by this chapter and has received a permit from the plumbing inspector for such work. Any person causing or permitting any such work to be done in violation of the provisions hereof shall be guilty of a violation of this chapter and subject to the penalties provided for such violation.

Sec. 49-102. Penalty.
Any person who shall violate or refuse, neglect, or fail to comply with any of the provisions of this chapter shall be deemed guilty of a misdemeanor and upon conviction shall be punished as provided in section 1-10 of this Code.

Sec. 49-103. Failure to correct defective work.
Any person who shall have been convicted for having done any work in a manner prohibited by this chapter and who shall fail, neglect or refuse to correct the same within ten days after conviction shall be guilty of an independent and separate offense for each day thereafter during which said work is permitted to remain in such improper condition.

DIVISION 2. Plumbing Board

Sec. 49-104. Created; purpose.
To provide for the administration and enforcement of this chapter and for the examination of plumbers and other persons to be licensed under this chapter, there is hereby created a plumbing board in and for the city.

Sec. 49-105. Composition.

(a) Eligibility. The plumbing board shall be composed of eight members, all of whom shall be residents of or live within the zoning jurisdiction of the city, or own a plumbing business or be employed by a plumbing business in the city or within the zoning jurisdiction. The journeyman plumbers and master plumbers shall be licensed plumbers, shall have not less than five years' active and continuous experience as such, and shall be actively engaged as a master plumber or journeyman plumber as their primary source of income. Notwithstanding the fact that members are appointed as representatives of groups which may have differing interests, all plumbing board members shall ultimately protect and serve in the public interest.

(b) Membership.

(1) One member shall be the health director of the county health department or a designated representative, provided that such member shall serve as a nonvoting member of the board.

(2) One member shall be the holder of a valid master plumber's certificate of competency, engaged in business as a plumbing contractor, and currently affiliated with a union shop.

(3) One member shall be the holder of a valid journeyman plumber's certificate of competency and currently affiliated with a union shop.

(4) One member shall be the holder of a valid master plumber's certificate of competency, engaged in

business as a plumbing contractor, and currently affiliated with a merit or open shop.

(5) One member shall be the holder of a valid journeyman plumber's certificate of competency and currently affiliated with a merit or open shop.

(6) One member shall be an architect licensed to practice in the State of Nebraska and engaged in business in the city.

(7) One member shall be a mechanical engineer licensed to practice in the State of Nebraska and engaged in business in the city.

(8) One member shall be a member of the general public who is not associated with the plumbing business.

(c) Definitions.

(1) Affiliated with a union shop shall mean a person who presently holds a local union card, or who is engaged in a business as a plumbing contractor that employs members of a plumbers' union.

(2) Not affiliated with a union shop shall mean a person who does not presently hold a local union card, or a past union member who presently does not hold union membership, or a person who is engaged in a business as a plumbing contractor which is an open or merit shop or does not employ members of a plumbers' union.

Sec. 49-106. Appointment of members.
The mayor, with the consent of the city council, shall appoint the members of the plumbing board.

Sec. 49-107. Term of members.
All new members of the plumbing board, except the health director, shall serve a term of three years from the date of confirmation of their appointment by the city council; provided that each such member shall continue to serve after such three years, until his successor has been appointed and qualified. The health director shall hold office during the term of office of the mayor by who appointed and shall be appointed at the beginning of each new term of the office of mayor.

Sec. 49-108. Bond of members.
Each member of the plumbing board shall give a bond in the sum of $1,000.00 conditioned according to law.

Sec. 49-109. Compensation of members.
The health director of the Douglas County Health Department, or his designated representative, shall act as a member of the plumbing board without extra compensation therefor. The other members of the board shall be paid at the rate of $25.00 for each meeting attended.

Sec. 49-110. Plumbing Board Advisor
The chief plumbing inspector or his designated representative shall attend all meetings of the plumbing board and shall act in a direct advisory capacity to the plumbing board and may act on the boards behalf in front of the administrative appeals board or the building board of review when instructed by the board to do so.

Sec. 49-111. Removal of members from office.
Any member of the plumbing board may be removed from office for cause by an action instituted in the district court.

Sec. 49-112. Vacancies.
Any member who fails to maintain all of the eligibility requirements set forth in section 49-105(a) as well as the applicable provisions of section 49-105(b) shall be deemed to have forfeited his/her position, thereby creating a vacancy. Vacancies occurring in the membership of the plumbing board shall be filled in the same manner as

original appointments from the appropriate classification as set forth in section 49-105(b) for the remainder of the unexpired term.

Sec. 49-113. Chairman.
The board shall annually select one of its members to serve as chairman

Sec. 49-114. Secretary.
A recording secretary shall be furnished to the plumbing board by the city. It shall be the duty of the recording secretary to keep full, true and correct minutes and records of all licenses issued by the board, together with their kinds and dates, and the names of the persons to whom issued, in books for that purpose, which books and records shall be open for free inspection by all persons during all business hours. Such recording secretary shall keep a record of all questions propounded to applicants for licenses, together with the answers thereto, and preserve the same for one year with the records of this office. Also, it shall be the duty of the recording secretary to notify in writing all members of the board of the date and time of all regular and special meetings.

Sec. 49-115. Meetings generally.
Regular meetings of the plumbing board shall be held not less than twice in every month on the second and fourth Wednesday of the month. Special meetings of the plumbing board may be called by the chairman pursuant to an action of the plumbing board at a regular meeting or upon the written request of any two members. The city shall make available to the board a location for the board to meet and to conduct business at a time convenient for the members of the board.

Sec. 49-116. Quorum.
Four members of the plumbing board shall constitute a quorum for the transaction of business.

Sec. 49-117. Rules and regulations--Generally.
The plumbing board shall have power and it shall be its duty to adopt rules and regulations not inconsistent with the provisions of this Code, state law or city ordinances for the sanitary construction, alteration and inspection of lawn sprinkler systems, water conditioners, plumbing and sewerage connections and drains placed in or in connection with any and every building or swimming pool in the city or within the zoning jurisdiction of the city, in which it shall prescribe the kind and size of materials to be used in such plumbing and the manner in which such work shall be done. It shall further have the power to make such additional regulations as may be necessary to properly protect health, life, limb and property, or as may be required to carry out the spirit and intent of this chapter, provided that all such rulings shall be along uniform lines, and shall not become effective until approved by the city council.

Sec. 49-118. Rules for examinations.
The plumbing board shall adopt rules for the examination of all persons who desire a license under this chapter.

Sec. 49-119. Appeal procedure.
(a) Whenever any person has made application for any license provided under this chapter, and such application has been denied or refused by the plumbing board, or whenever any license theretofore granted has been refused, suspended or revoked by the plumbing board, such applicant or such person whose license has been refused, suspended or revoked may appeal from such action of the plumbing board to the administrative appeals board by complying with the provisions of section 2-171 et seq. of this Code.

(b) The building board of review shall have the authority to hear appeals from the plumbing board in matters regarding variances and interpretation of ordinances, plumbing code changes, rules, and regulations. Any such appeal shall be filed by complying with the applicable appeal provisions of section 43-62 of this Code.

Sec. 49-120. Record of complaints.
The plumbing board shall maintain a record of all complaints filed in the city regarding violations of chapter 49 of this Code, and a record of the disposition of each such complaint by the plumbing board.

Secs. 49-121—49-200 Reserved

ARTICLE II. LICENSING

Division I General

Sec. 49-201. Issuance of license.
If the applicant for a license required by this article has shown himself competent and has complied with all other provisions of this chapter, the plumbing board shall cause its chairman and secretary to execute and deliver to the applicant a license.

Sec. 49-202. Reexamination after failure.
In the case where an applicant for a license has failed to pass an examination to the satisfaction of the plumbing board, the applicant may take another examination any time after the expiration of three months from the previous date of examination.

Sec. 49-203. License fees.
The fees for the original issuance and renewal of a license required by the provisions of this chapter shall be as provided in section 19-73 of this Code.

Sec. 49-204. Date of examination.
The examination for licenses shall be held at the next regular or adjourned meeting of the plumbing board following approval of the application for the required license.

Sec. 49-205. Compliance with law.
Every license holder shall faithfully observe all provisions of this code, federal and state laws and city ordinances, rules and regulations pertaining to plumbing. All plumbing work shall be executed by or under the supervision of a master plumber, water conditioning contractor, or lawn sprinkler contractor executed in a workmanlike manner, and of such character as to fully secure the results sought to be obtained in all sections of this chapter.

Sec. 49-206. Misuse of name.
No person engaged in business as a master plumber, water conditioning contractor, or lawn sprinkler contractor shall allow their name to be used by any other person, directly or indirectly, either to obtain a permit or to do any work under his license, under penalty of having his or their license revoked.

Sec. 49-207. Registration.
Any person desiring to engage in business as a master plumber, water conditioning contractor, or lawn sprinkler contractor in the city shall have their full name, residence, and place of business registered in a book kept for that purpose by the chief plumbing inspector. The license holder will be assigned a contractor registration number that will be recorded in the registration book and which shall be used in conjunction with the issuance of permits. In case of change of address or business name it shall be the duty of such person to notify the chief plumbing inspector at once of such change. No person shall in any case be granted a license unless registered as herein provided.

Sec. 49-208. Display of name on trucks.
All trucks used by the master plumber, water conditioning contractor, or lawn sprinkler contractor in the conduct of business shall have the name of the license holder or firm name, in letters not less than two inches high, on both sides of the truck.

Sec. 49-209. Display of license.
Every licensed master plumber, water conditioning contractor, or lawn sprinkler contractor shall post and display such license in a conspicuous place in his place of business.

Sec. 49-210. Bond required.
Upon completion of a favorable examination for a master plumber, water conditioning contractor, or lawn sprinkler

contractor license, there shall be filed with the city a bond in the sum of $10,000.00 with sufficient sureties, such bond to be for the protection of the city against loss or damage by reason of carelessness or negligence of the person holding such license to properly execute and protect any and all plumbing work performed by him or work under his supervision during the period of such license.

Sec. 49-211. Expiration of license.
All original and renewal licenses issued under the provisions of this chapter shall expire on December 31.

Sec. 49-212. Renewal of license.
All original licenses issued under this chapter shall be renewed. Such renewal license shall be granted without a re-examination, unless it is made to appear by affidavit or other evidence before the board that the applicant is no longer competent or entitled to such renewal license, in which event the renewal license shall not be granted until the applicant has undergone the examination hereinbefore required. No renewal license shall be granted without approval of the board. All applications for renewal of master plumber, water conditioning contractor, or lawn sprinkler contractor licenses must be accompanied by the required bond and certificate of insurance in the amount provided for. Any license holder failing to renew his license by March 31after the date of expiration shall not be issued a new license without again applying to the Plumbing Board for consideration of reinstatement and payment of a late reissuance fee equal to four times the original issuance fee.

Sec. 49-213. Temporary license.
(a) Sole proprietor, majority stockholder of a corporation.

(1) In case of the death or resignation of a licensed master plumber, water conditioning contractor, or lawn sprinkler contractor who is a sole proprietor, majority stock holder of a corporation or an employee of a firm or corporation the plumbing board may issue a special temporary license as a master plumber, water conditioning contractor, or lawn sprinkler contractor for a period of not more than one year.

(2) The following persons will be eligible for a temporary license, a licensed journeyman plumber for the masters, a licensed water conditioning installer for the water-conditioning contractor, the business owner for the lawn sprinkler contractor.

(3) An examination will not be required.

(4) The holder of the special temporary license shall comply with all provisions of this chapter.

Sec. 49-214. Revocation or suspension of license.
Any license issued under this chapter may be revoked or suspended for cause by the plumbing board at any time upon a hearing and sufficient written, sworn charges filed with the board. The charges shall show the holder of the license to be then incompetent or guilty of willful breach of the rules, regulations or the requirements of the board. The holder of such license shall have written notice of the hearing. Any person having his license revoked for said cause shall not be granted a new license for a period of one year thereafter, and shall be required to submit to reexamination for such new license. Any suspension shall be for such term or conditions judged appropriate by the board, but in no case shall any suspension exceed a term of six months.

Sec. 49-215. Continuing education.
(a) During each calendar year, every license holder shall be required to take continuing education classes or seminars and present to the plumbing board, by the end of each calendar year, proof of satisfaction of that requirement for that calendar year. The requirement for each license is as follows:

(1)	Master Plumber	8 hours
(2)	Journeymen Plumber	8 hours
(3)	Sewer Layer	4 hours
(4)	Water Conditioning Contractor and Installer	4 hours
(5)	Lawn Sprinkler Contractor	4 hours

(b) All classes or seminars shall have prior approval of the plumbing board and shall deal with any of the following subjects:
   (1) Omaha plumbing code, MUD rules, plumbing theory, or other related subjects;
   (2) New and existing products and their installation.

(c) The failure of a license holder to present proof of continuing education as required in subsection (a) above may serve as grounds for the revocation or suspension of that license by the plumbing board.

Sec. 49-216. Transfer of license.
All licenses issued under the provisions of this Chapter shall be nontransferable.

Secs. 49-217--49-219 Reserved.

Division 2. Master Plumbers

Sec. 49-220. License required.
(a) It shall be unlawful for any person, including firms and corporations, to engage in the business of plumbing as a master plumber unless he shall be the holder of a valid master plumber's license and be registered and bonded as such as provided for in this article.

(b) Such master plumber's license shall have been issued by the Plumbing Board of the city.

(c) In the case of any firm having more than one person, only one of such persons shall be required to qualify as a master plumber; in the case of a legally constituted corporation, only one executive officer, who is liable to service of regular processes, shall be required to qualify as a master plumber.

(d) A master plumber's license shall only be valid and in effect for one company, firm, or corporation for whom the license holder is a full time employee, and shall not be assignable to, or be available for use by any other company, firm, or corporation; provided, that if the license holder owns fifty percent or more of each company, firm or corporation he may use the license for that company, firm or corporation. This section shall not disqualify a master plumber from using his license on behalf of a corporation for which he is an officer, as of the effective date of this ordinance.

Sec. 49-221. Application for examination.
Any person desiring to do any plumbing work or to work at the business of plumbing as a master plumber shall make a written application to the plumbing board for examination for such license.

Sec. 49-222. Qualifications.
All applicants for a license as a master plumber must:

(a) Have reached the age of majority in the State of Nebraska.

(b) Have four years' experience in the installation of plumbing systems while holding a journeyman plumber's license issued by the city or a comparable license issued by another city, or be a registered professional mechanical engineer and have two years continuous experience or four years' collective experience in the installation of plumbing systems.

If the applicant has met the above criteria then he shall take an exam administered by the plumbing board to determine his competency.

Sec. 49-223. Examination fee.
The applicant shall pay an examination fee of $75.00 for a master plumber's examination to the secretary of the

Plumbing Board, which sum the applicant shall not be entitled to recover regardless of the result of such examination.

Sec. 49-224. Scope of examination.
Each applicant for a license required by the provisions of this division shall be examined as to his knowledge of plumbing systems, house drainage, ventilation, and sanitation, which examination shall be both practical and theoretical. Subjects tested by the examination shall include, but not be limited to, the following:

(a) The applicant's knowledge of all provisions of this Code, state law, and rules or regulations pertaining to plumbing; and

(b) The applicant's ability to design, direct and supervise the installation of plumbing systems.

Sec. 49-225. Retired master's license.
(a) A licensed master plumber who wishes to fully retire from the plumbing business may apply to the plumbing board for a retired master plumber's license. Upon such application and payment of renewal fees ordinarily applicable to a master plumber's license, the plumbing board may grant such person a retired master plumber's license. The holder of a retired master plumber's license shall not engage in any plumbing activities for which a master or journeyman's license is otherwise required under this Code.

(b) The bond and insurance requirements of section 49-210 and the continuing education requirements of section 49-215(a)(1) shall not be required as prerequisites for the issuance, maintenance, or renewal of the retired master plumber's license.

(c) A holder of a retired master plumber's license may make application to the plumbing board for a reactivation of his or her status as a master plumber. The plumbing board may issue such a master's license, upon compliance with all of the following:

(1) Payment of the required fees applicable for the renewal of a master's license;

(2) The filing of a bond and certificate of insurance pursuant to section 49-210 and 49-301.

(3) Proof that the applicant has attended eight hours of continuing education for every year the applicant held a retired master plumber's license, which continuing education shall have been approved in advance by the plumbing board.

Sections. 49-226 – 49-229 Reserved.

Division 3. Journeyman Plumbers

Sec. 49-230. License required.
Any person desiring to do any plumbing work as a journeyman plumber shall first obtain a license to do so from the plumbing board.

Sec. 49-231. Scope of license.
The holder of a valid journeyman plumber license shall be eligible to install, make repairs, alteration or extension to the plumbing system while in the employment of a master plumber.

Sec. 49-232. Qualifications.
An applicant for a license as a journeyman plumber must have not less than four years' practical experience in the installation of plumbing and drainage and shall successfully complete an examination of his qualifications and meet one of the following criteria:

(a) Complete an apprenticeship program certified by the city.

(b) Provide evidence of completing a course of study with an equivalent number of instructional and experience hours.

(c) Provide evidence of qualifying as a journeyman plumber in a city of equivalent size which requires similar testing criteria.

Sec. 49-233. Application for license.
Any person desiring a license as a journeyman plumber shall file a written application therefore with the secretary of the plumbing board, which application shall be made on forms furnished by the board.

Sec. 49-234. Examination fee.
At the time of the examination, the applicant shall pay to the secretary of the plumbing board an examination fee of $50.00. No portion of the examination fee may be returned to the applicant regardless of the result of the examination.

Sec. 49-235. Scope of examination.
Each applicant for a license required by the provisions of this division shall be examined as to his knowledge of plumbing, building drainage, venting and sanitation, which examination shall be both practical and theoretical.

Sec. 49-236. Identification badges.
With all journeyman licenses there shall be issued by the plumbing inspector, at the time such license or certificate is granted, an identification badge bearing the date of the year issued, a badge number, and the classification "Licensed Journeyman Plumber." Badges must be worn by the holders thereof at all times while performing plumbing work. A journeyman plumber shall pay the sum of $10.00 for such badge.

Sec. 49-237. Retired journeyman's license.
(a) A licensed journeyman plumber who wishes to fully retire from the plumbing business may apply to the plumbing board for a retired journeyman plumber's license. Upon such application and payment of renewal fees ordinarily applicable to a journeyman plumber's license, the plumbing board may grant such person a retired journeyman plumber's license. The holder of a retired journeyman plumber's license shall not engage in any plumbing activities for which a master or journeyman's license is otherwise required under this Code.

(b) The continuing education requirements of section 49-215(a)(2) shall not be required as a prerequisite for the issuance, maintenance, or renewal of a retired journeyman plumber's license.

(c) A holder of a retired journeyman plumber's license may make application to the plumbing board for a reactivation of his or her status as a journeyman plumber. The plumbing board may issue such a journeyman's license, upon payment of the required fees and upon the applicant's proof that he or she has attended eight hours of continuing education for every year the applicant held a retired journeyman plumber's license. Such continuing education shall have been approved in advance by the plumbing board.

Sections. 49-238 – 49-239 Reserved.

Division 4. Apprentice Plumbers

Sec. 49-240. Registration required.
No master plumber shall employ any apprentice who is not registered with the plumbing board.

Sec. 49-241. Supervision.
No apprentice plumber shall perform any plumbing work unless he is on the job with and under the direct supervision of a licensed journeyman or master plumber except that an apprentice in his/her final year of

apprenticeship may work by himself/herself on service and repair work. During any apprenticeship extending beyond the final year, the apprentice shall be with and under the direct supervision of a licensed journeyman or master plumber. Service and repair work shall include, for the purpose of this section, only the following:

(a) The cleaning of stoppages in drains, soil, waste or vent pipe.

(b) The repair of leaks in pipes and valves when such repairs do not involve or require the rearrangement of valve or pipes and the total distance of the pipe to be replaced is less than 15 feet.

(c) The replacement of such fixtures as water closets, lavatories, water heaters, disposals, dishwashers, and kitchen sinks, when such replacement does not require the rearrangement of water, waste and vent piping; provided, that an apprentice shall not set fixtures in a new house or building or on a remodeling job.

(d) The replacement or repair of faucets, traps and supplies on existing fixtures.

(e) The installation and replacement of sill cocks, pressure reducing valves, backflow preventers and like devices.

Sec. 49-242. Registration information.
Every apprentice plumber shall register his name and address, place of employment, and any change of employment with the plumbing board before January 1 of each year and within 30 days of a change of employment.

Sec. 49-243. Registration fees.
The fee for the original registration for apprentice plumbers shall be the sum of $15.00. All renewal fees for apprentice plumbers shall be the sum of $15.00.

Sec.49-244. Certification of apprenticeship programs.
The plumbing board shall certify that all apprenticeship programs conform to the following minimum requirements:

(a) *Affirmative Action*: A specific plan, stating methods to recruit members of minority groups and women into apprenticeship positions and including measurable performance objectives.

(b) *Employment Experience*: A minimum of four (4) years of practical on the job training for each apprentice with not less than 1,600 hours annually.

(c) *Technical Instruction:* Provision for a minimum of 576 hours of organized, instruction related to the plumbing trade.

(1) All instructors shall be a licensed Omaha master or journeyman plumber or a mechanical engineer licensed by the State of Nebraska.

(2) Curriculums shall be certified by the board on an annual basis.

(3) Any group, organization or union may have its programs decertified for falsifying classroom attendance.

(4) The curriculum shall have a minimum of 200 hours of instruction on the Omaha Plumbing Code.

(d) *Ratio of Apprentices to Journeymen:*

(1) One apprentice may be employed in each shop employing a licensed journeyman and one additional apprentice for each one additional licensed journeyman regularly employed.

(2) If a master plumber is the only employee in a shop, he may employ one apprentice.

(3) The ratio language shall be applicable to the overall work force of the company and to the staffing of

individual job sites.

(4) A temporary exception for up to six months to the ratio may be allowed for layoffs, or journeyman resignations. If at any time the ratio falls short of compliance; the sponsor shall notify the board (in writing) of the circumstances and his intentions to resolve the ratio imbalance.

(e) *Qualifications for Apprenticeship Entry*

(1) Applicant must be at least eighteen years of age.

(2) Applicant must have a high school education or a general equivalency certificate (GED).

Sec. 49-245. Credit for experience obtained outside the jurisdiction of the City of Omaha.
When an apprentice asks for credit for experience:

(a) Both the apprentice and the sponsor must appear before the board.

(b) The sponsor will submit written documentation of the apprentice's on the job training.

(c) The sponsor will submit written documentation of the apprentice's classroom training.

(d) When the apprentice has no classroom training, the board will determine final placement pending the results of a school equivalence test given by the Planning Department.

Sec. 49-246. Group apprenticeship programs.
Any group, organization or union may have a joint apprenticeship program with multiple persons, firms and corporations, engaged in the business of plumbing. Any joint apprenticeship program shall meet the minimum requirements of section 49-244. A numeric ratio of apprentices to licensed plumbers may not be greater than one apprentice for every one licensed plumber. The ratio language shall be specific and clear as to application in terms of job site and work force.

Sec. 49-247. Apprenticeship classroom instructional programs.
The plumbing board shall establish standards for classroom instruction and shall certify instructional programs annually. Classroom instructional requirements must be fulfilled only through organized programs, which have been reviewed and approved by the Plumbing Board prior to the commencement of classroom instruction.

Any certified instructional program and any instructional program being submitted to the City of Omaha Plumbing Board for certification, must conform with the following minimum requirements:

(a) Provision for four years of classroom instruction comprised of a minimum of 576 verifiable hours of organized classroom instruction.

(b) All 576-hour instructional programs must offer a minimum of two hundred hours of "Omaha Plumbing Code" instruction as well as instruction in the use of plumbing tools, construction safety, blueprint reading, plumbing system design, installation of the various types of plumbing materials, welding, plumbing related math and other subjects relevant to the plumbing trade.

(c) All instructors associated with the approved programs must be a Master or Journeyman plumber licensed by the City of Omaha or a Mechanical Engineer licensed by the State of Nebraska.

(d) All previously approved instructional programs shall, at the end of each annual classroom schedule and before commencement of the following annual schedule, submit to the Plumbing Board an annual report. Upon review and approval of the annual report, the Plumbing Board shall give authorization to proceed with the subsequent classroom schedule. The annual report to the Plumbing Board shall contain a listing of the following:

(1) The names and qualifications of the previous session's instructors.

(2) The subjects taught during the previous session.

(3) The approximate amount instructional time spent on each topic.

(4) The names of the apprentices who attended the classes.

(5) The actual verifiable number of hours of classroom participation by each apprentice.

Sec. 49-248. Revocation or suspension of apprentice card.
An apprentice plumber may have his/her apprentice card revoked or suspended for installing plumbing while not in the employment of a master plumber or while not under the supervision of a master or journeyman plumber, except as noted in section 49-241.

Sec. 49-249. Expiration of registration.
All registrations issued under the provisions of this division shall expire on December 31 after issuance.

Division 5. Sewer Layers

Sec. 49-250. License required.
It shall be unlawful for any person to do any sewer laying work without first obtaining a license to do so from the plumbing board.

Sec. 49-251. Application for license; examination required.
Any person desiring a sewer layer's license shall make application to the plumbing board for a license. Before a license shall be issued under the provisions of this article, the applicant shall first successfully complete an examination.

Sec. 49-252. Scope of license.
The holder of a valid sewer layer's license shall be eligible to make sewer connections from the building drain to the building sewer, make repairs, extensions or alterations of any sewer connection and stub to or tap any public sewer under the supervision of a master plumber.

The holder of a valid sewer layer's license shall be eligible to install or make repairs, extension or alteration of water services from the water purveyor's mains to the first meter valve on services of one inch or less when all connections are made with flared type fittings under the supervision of a master plumber.

Sec. 49-253. Examination fee.
Any person desiring a license required by the provisions of this division shall, at the time of application therefore, pay an examination fee of $25.00 to the city.

Sec. 49-254. Scope of examination.
The examination for a license required by this division shall be both practical and theoretical and shall be designed to test the applicant's knowledge of sewer laying and water services.

Sec. 49-255. License fee.
The fee for a license required by the provisions of this division shall be as set forth in section 19-79 of this Code.

Sections 49-256--259 Reserved.

Division 6. Water Conditioning Contractor's and Installer's Licenses

Sec. 49-260. License required.

(a) It shall be unlawful for any person including firms and corporations to engage in business as a water conditioning contractor or to install, replace or relocate a water conditioning appliance without first obtaining a license to do so from the plumbing board and be registered and bonded as such as provided for in this article; provided, however, a master or journeyman plumber licensed in accordance with the provisions of this chapter may perform such work without having to secure an additional license.

(b) In the case of any firm having more than one person, only one of such persons shall be required to qualify as a water conditioning contractor; in the case of a legally constituted corporation, only one executive officer, who is liable to service of regular processes, shall be required to qualify as a water conditioning contractor.

(c) A water conditioning license shall only be valid and in effect for one company, firm, or corporation for whom the license holder is a full time employee, and shall not be assignable to, or be available for use by, any other company, firm, or corporation. This section shall not disqualify a water-conditioning contractor from using his or her license on behalf of a corporation for which he/she is an officer, as of the effective date of this ordinance.

Sec. 49-261. Scope of license.

The holder of a valid water conditioning contractor's license or the holder of a valid water conditioning installer's license employed by a water conditioning contractor may install, replace, relocate or repair a water conditioning appliance or point of use appliances within the following limits:

(a) Extend piping from the point of connection with the existing potable water system a maximum of ten feet to the water inlet or outlet of the water-conditioning device.

(b) Extend piping from the point of connection with the existing potable water system a maximum of five feet to the water inlet or outlet of a point-of-use or reverse osmosis device.

(c) Install the drain line from the water-conditioning device to an approved drain.

Sec. 49-262. Application; qualifications.

(a) An applicant for a water conditioning contractor's license must have not less than four years of practical experience in the installation and sizing of water conditioning appliances and shall successfully complete an examination of his qualifications.

(b) An applicant for a license as a water conditioning installer shall first serve an apprenticeship of one year and successfully complete 100 hours of organized, related instruction in technical subjects related to the installation, repair and sizing of water conditioning appliances. The plumbing board shall establish standards for such instruction.

Sec. 49-263. Examination fee.

The fee for an examination for a license required by the provisions of this division shall be $25.00.

Sec. 49-264. Scope of examination.

The plumbing board shall, prior to issuing any license under this division, examine the applicant as to his technical knowledge and ability to install water conditioning appliances, and his knowledge of water supply piping and fittings as related to the installation of a water-conditioning appliance. The examination shall not include the applicant's knowledge of plumbing, house drainage, ventilation or sanitation to the extent required to meet the standards applied in licensing master plumbers or journeyman plumbers.

Sec. 49-265. License fees.
The fees for a license required by the provisions of this division shall be as set forth in section 19-91 of this Code

Sections 49-266--269 Reserved.

Division 7. Lawn Sprinkler Contractor License

Sec. 49-270. License required.

(a) It shall be unlawful for any person including firms and corporations to engage in business as a lawn sprinkler contractor or to install, replace, relocate or servicing a lawn sprinkler system without first obtaining a license to do so from the plumbing board and be registered and bonded as such as provided for in this article; provided, however, a master or journeyman plumber licensed in accordance with the provisions of this chapter may perform such work without having to secure an additional license.

(b) In the case of any firm having more than one person, only one of such persons shall be required to qualify as a lawn sprinkler contractor; in the case of a legally constituted corporation, only one executive officer, who is liable to service of regular processes, shall be required to qualify as a lawn sprinkler contractor.

(c) A lawn sprinkler license shall only be valid and in effect for one company, firm, or corporation for whom the license holder is a full time employee, and shall not be assignable to, or be available for use by, any other company, firm, or corporation. This section shall not disqualify a lawn sprinkler contractor from using his or her license on behalf of a corporation for which he/she is an officer, as of the effective date of this ordinance.

(d) It shall be unlawful for any individual to install, alter, or assemble any lawn sprinkler systems unless he is registered as a lawn sprinkler installer with the plumbing board and employed by a licensed lawn sprinkler contractor; provided, that a residential homeowner may install a lawn sprinkler system from the backflow device, at his own home only, without such license, and such system shall be subject to the permits, inspections, and other requirements of this article.

Sec. 49-271. Qualifications.
All applicants for lawn sprinkler contractor's licenses must:

(a) Have reached the age of majority in the State of Nebraska; and

(b) Have four years' experience in the installation and design of lawn sprinkler systems.

For the purpose of this section an applicant’s employment experience shall not be less than 1,400 hours annually.

Sec. 49-272. Examination fee.
The fee for examination for a lawn sprinkler contractor's license required by the provisions of this division shall be $30.00.

Sec. 49-273. Scope of examination.
The plumbing board shall, prior to issuing any license under this division, examine the applicant as to his/her technical knowledge of water supply piping and fittings as related to the installation of a lawn sprinkler system. The examination shall not include the applicant's knowledge of plumbing, house drainage, ventilation or sanitation as would be required to meet the standards applied in licensing master plumbers or journeyman plumbers.

Sec.49-274. License fee.
The fee for a lawn sprinkler contractor's license required by the provisions of this division shall be $25.00.

Sec. 49-275. Scope of license.
The holder of a valid lawn sprinkler contractor's or installer's license may install, repair or relocate only that part of the lawn sprinkler system from the discharge side of approved vacuum breaker or backflow preventer. Only the holder of a valid master plumber's license, or a journeyman plumber's license, working under such a master plumber, shall install the vacuum breaker or backflow preventer.

Sections 49-276--299 Reserved.

ARTICLE III. PERMITS AND INSPECTION

Division 1. Permits

Sec. 49-300. Required.
It shall be unlawful for any person to begin any job of plumbing until a license holder has secured from the permits and inspections division a permit to do such work; provided that no permit will be required for minor repair work as defined in sections 49-400 and 49-303.

Where equipment replacements and repairs must be performed in an emergency situation, the permit application shall be submitted within the next working business day to the permits and inspections division.

Sec. 49-301. Qualifications to obtain a permit.
To obtain a permit a licensed master plumber, water conditioning contractor or lawn sprinkler contractor, shall have on file with the city a certificate of insurance which provides combined coverage for bodily injury and property damage in a minimum amount of $1,000,000 plus a bond in the sum of $10,000.00 with sufficient sureties, such bond to be for the protection of the city against loss or damage by reason of carelessness or negligence of the person holding such license to properly execute and protect any and all plumbing work performed by him or work under his supervision during the period of such license.

A certified fire suppression specialist may obtain a permit for installation of reduced pressure principle backflow preventers and double check valves on a fire suppression system. Such contractor, shall have on file with the city a certificate of insurance which provides combined coverage for bodily injury and property damage in a minimum amount of $1,000,000 plus a bond in the sum of $10,000.00 with sufficient sureties, such bond to be for the protection of the city against loss or damage by reason of carelessness or negligence of the contractor.

Sec. 49-302. Issuance of permits restricted.
Only a licensed master plumber filling an additional surety bond for street excavation in an amount no less than the sum of $20,000.00 with the city shall be eligible to secure permits for the installation, repair or alteration of building sewers, storm sewer or water services.

Sec. 49-303. Exception for minor repair work.
No permit shall be required under the provisions of this article for repairs which involve only the working parts of a faucet or valve, clearance of stoppages, or repairing or replacement of defective faucets or valves; minor repairs of water conditioning appliances or minor repairs of a lawn sprinkler system; provided that alterations are not made in the existing piping or fixtures and appliances. It shall be unlawful for any person, including firms and corporations, to perform minor repair work without first having obtained a license as required; provided that the owner of the property and his or her employees may perform minor repair work on that property.

In buildings or premises where a list of deficiency by a housing inspector of the Planning Department because of unsanitary condition of the plumbing system, or parts thereof, the alterations of such system shall not be considered as repairs, but as new work.

In buildings or premises condemned by a housing inspector of the Planning Department the plumbing system shall be required to meet all current standards of this chapter.

Sec. 49-304. Application.
Application for a permit required by the provisions of this article shall be made on forms furnished by the permits and inspections division. Such application shall show:

(a) The name of the owner, agent or occupant of the premises where the work is to be done.

(b) The location of the premises by lot, block and addition or street name and number.

(c) The printed name, address and signature of the master plumber having charge of such work.

(d) A description of the work to be done, setting forth the number and kind of plumbing fixtures.

Sec. 49-305. Plans and specifications.
Before any plumbing permit can be issued for the installation of a plumbing system in any building, there shall be filed by the owner or his authorized agent, with the Planning Department, plans, riser diagrams and specifications, in triplicate, showing and specifying such system. The Planning Department shall affix their approval, or, in case of disapproval, reasons for such disapproval, retaining one copy for the files and making two copies available to the owner or his agent. Nothing in this chapter will require the owner or his authorized agent to submit plans or specifications for repair of existing plumbing, private residence installations and minor installations in existing buildings. The owner or his authorized agent shall have the right to substitute materials and make minor alterations in his plans and specifications without further approval, provided that such changes and substitutions meet the minimum standards set out in this chapter. For purposes of this section, minor installations in existing buildings shall be defined as the installation and/or relocation of ten fixtures or less.

Sec. 49-306. Fees.
Before any permit shall be issued under the provisions of this chapter, the applicant shall pay the following appropriate fees:

(a)	For each fixture or opening roughed in or roof drain	$ 7.95
(b)	For each change in location of plumbing fixture	$ 7.95
(c)	For moving or rearranging any part of drainage or venting system, each such change	$ 7.95
(d)	For below ground swimming pool	$ 58.90
(e)	For backflow protective devices:	
	(1) Atmospheric vacuum breakers	$ 7.95
	(2) Pressure vacuum breakers assembly	$ 11.35
	(3) Reduced pressure principle backflow preventer assembly and. Double check valve assembly	$ 28.85
(f)	For each hot tub, spa or above ground swimming pool	$ 17.00
(g)	For each solar collector array (including related piping and regulating devices)	$ 11.35
(h)	For each storage tank incorporated into a solar energy system (including related piping and regulating devices)	$ 7.95
(i)	For each residential water heater	$ 7.95
(j)	For each commercial water heater	$ 34.00
(k)	For each residential water heater replacement, maximum fee	$ 11.35
(l)	For indirect waste	$ 5.65

(m)	For each water connection, repair, extension or alteration.	
	(1) For water services not used for fire protection	$ 7.95
	(2) For water services used for fire protection	$ 55.00
(n)	For each residential connection of property or each stub, extension or alteration of a sewer	$ 45.30
(o)	For each commercial connection of property or each stub, extension or alteration of a sewer	$ 61.80
(p)	For each area inlet and downspout opening	$ 7.95
(q)	For each repair of a building sewer	$ 45.30
(u)	For each tap of a sewer or manhole	$ 45.30
(r)	For each 50 lawn sprinkler heads or fraction thereof	$ 11.30
(s)	For each water conditioning device	$ 10.30

The minimum fee for any permit shall be $22.70.

Sec. 49-307. Commencing work without permit.
In the event any work for which a permit is required by the provisions of this article is started before obtaining such permit, such work shall be stopped, and shall not be resumed, until such permit is obtained. Upon application for such permit, the amount of the fee specified therefore shall be a minimum of $100.00 or quadrupled, whichever is greater; provided, however, upon clear and convincing proof of a practical hardship, inadvertent mistake or error, the chief plumbing inspector may waive such penalty fee.

Sec. 49-308. Second permit required in case of completion of work by different plumber.
When one license holder completes the rough work in whole or in part of any plumbing job and another license holder is called to complete said plumbing work, either in whole or in part, then a new permit is required. Each person holding a permit for the construction of such work shall be held responsible only for the work he has installed. Before the second party is issued a permit for the completion of the plumbing job, the plumbing inspector shall first notify the license holder holding the original or first permit in writing that a new permit is to be issued. A new permit shall be invalid until such notice is given.

Sections. 49-309--49-319 Reserved.

Division 2. Inspections

Sec. 49-320. Required.
It shall be unlawful for any person to allow or permit water or sewage to flow through water or drainage piping that may be installed or such existing piping as may be altered or repaired, or to use the same, until such piping has been inspected, tested, and approved by the plumbing inspector.

Sec. 49-321. Exception.
No test or inspection shall be required where a plumbing system or part thereof is set up and used for exhibition purposes only and has no connection with the sewer or water supply system.

Sec. 49-322. Qualifications of inspectors.
The chief plumbing inspector and all other plumbing inspectors of the city shall meet the qualifications set up by the personnel director. They shall have had at least seven years' active and continuous experience as a licensed plumber in the city. They shall hold a valid plumber's license which shall have been issued by the plumbing board, and they must be skilled and experienced in the sanitary installations of all plumbing work in all classes of building, and in making proper tests of old, as well as new, installations of plumbing systems.

Sec. 49-323. Conflict of interest of inspectors.
It shall be unlawful for the chief plumbing inspector, or any of his inspectors, to engage in the business of the sale, installation, or maintenance of plumbing or plumbing fixtures, either directly or indirectly. They shall have no financial interest in any concern engaged in such business at any time while in the employ of the city.

Sec. 49- 324. Duties and authority of inspectors.
The chief plumbing inspector shall be under the direction of the permits and inspections division. Plumbing inspectors shall be under the direction of the chief plumbing inspector. The chief plumbing inspector and plumbing inspectors shall have the authority and it shall be their duty:

(a) To enforce all provisions of this chapter.

(b) To inspect all plumbing work in the process of construction, alteration, or repair within the city and within three miles of the city limits.

(c) To file a complaint with the plumbing board against any person or persons who violate any of the provisions of this chapter.

Sec. 49-325. Investigation and prosecution of violations.
It shall be the duty of the plumbing inspector to investigate all cases reported to or referred to him, of the use of improper material or workmanship on any job of plumbing work or the violation of the provisions of this chapter, either by any license holder, builders, agents, or owners, to stop such work, and to order same removed and replaced in a proper and workmanlike manner with the proper material to conform to the purpose and intent of this chapter.

Sec. 49-326. Right of entry of inspectors.
The chief plumbing inspector and plumbing inspectors shall carry an official badge of office and upon exhibition thereof shall have the right of entry at reasonable times into and upon all buildings or structures and premises within the regulatory jurisdiction of the city for the purpose of making inspections, reinspections or investigations, or otherwise performing such duties as may be necessary in the enforcement of the provisions of this chapter or any amendments thereto.

Sec. 49-327. Notification that work is ready for inspection.
It shall be the duty of any license holder to notify the office of the plumbing inspector when plumbing work is ready to be inspected. The plumbing inspector shall, within eight working hours thereafter, make the necessary inspection. If the plumbing is not rejected within eight working hours after an inspection is ordered, the plumbing work may be covered at the master plumber's responsibility. More than one rough inspection may be made without charge when the progress of construction requires such inspection.

Sec. 49-328. Final inspection.
Within ten (10) days after the completion of any job of plumbing work, it shall be the duty of the license holder having charge of such work to notify the plumbing inspector that such work is ready for final inspection, and no such plumbing or drainage system shall be used until it has been inspected and approved by the plumbing inspector.

Sec. 49-329. Work not to be covered before inspection.
No person shall so cover or conceal from view any plumbing work on any building or building site so as to prevent the proper inspection as required in section 49-327 and a notice or sign stating that the plumbing has been inspected and approved.

Whenever any plumbing work in any building has been covered by lathing, plastering, flooring, or otherwise, before the plumbing inspector has had reasonable opportunity to inspect same, then the plumbing inspector shall have the authority to require the removal of such obstruction sufficiently to afford an adequate means of making proper inspection

Sec. 49-330 Inspections of sanitary and storm sewers.

(a) When boring or pipe bursting is used, the following inspection procedures will be used:

(1) The plumbing inspector shall observe the insertion of any pipe through holes bored underground. There shall be unrestricted insertion of the pipe through the hole. If the inspector believes excessive force has been applied to the pipe during insertion, an air test shall be performed on the portion of pipe installed through the hole. If the test fails the pipe shall be removed.

(2) After installations is completed the pipe will be required to be flushed with water and then videoed in the presence of a plumbing inspector. Sewer pipe installations less than 75 feet long with a fall of 1/2 inch per foot or more will not be required to be flushed or videoed.

(3) When soil conditions require that the hole to be bored be considerably larger than the outside diameter of the plastic pipe, the void around the pipe must be mud-jacked in the presence of a plumbing inspector or ductile iron pipe must be installed. In addition, the pipe must be flushed with water and then videoed in the presence of a plumbing inspector.

(b) Where pipe is laid in an open trench the following inspection procedures will be used.

(1) Sewer pipe, regardless of size, laid in an open trench with less than 1/8 inch per-foot fall shall be installed in a bed of Class II material and laid with the aid of a laser. In addition, the pipe must be flushed with water and then videoed in the presence of a plumbing inspector.

(2) Any time the plumbing inspector has cause he may require a test on the piping.

(c) Storm piping used for detention.

(1) Any piping used for detention of storm water shall be required to be gasketed pipe

Sec. 49-331. Correction of defective work; reinspections.

If plumbing work is found to be faulty, or incorrectly or defectively installed, the plumbing inspector shall notify the master plumber who installed or is in charge of such installation of the changes necessary to be made in order that the same may conform to this chapter, and that reinspection is necessary. The license holder shall, within 48 hours from the time of notification, cause, make, or commence to make the changes ordered, and shall proceed with the work until same has been completed. Upon completion thereof, he shall notify the plumbing inspector to that effect. The plumbing inspector shall then cause the reinspection to be made, and if said work is found to comply with this chapter he shall sign the inspection card, noting thereon the date of approval of the work. If the plumbing inspector shall again find the work incorrectly installed, he shall notify the master plumber of the necessary changes.

Fees for reinspection. In case the plumbing inspector is required to make more than one trip from his office for the purpose of inspecting any work on account of violation of rules, wrong address, or any other irregularities caused by the contractor or any of his employees, the following charges will be made and paid before the certificate of inspection is issued:

(a) First additional trip: No charge.
(b) Second additional trip and each additional trip thereafter: $16.50.

Sec. 49-332. Certificate of inspection.

It shall be the duty of the plumbing inspector to inspect all plumbing work covered by the provisions of this chapter and if, after having made inspection on any job, the same is found to be properly done as required by this chapter, it shall be the duty of the plumbing inspector upon request to issue to the license holder in charge of the work a certificate setting forth that the work has been done according to the requirements of this chapter.

Sections. 49-333--49-339 Reserved.

Division 3. Testing

Sec. 49-340. Required tests.
All the piping of plumbing, rainwater, or drainage system shall be tested with water or air as hereinafter set forth.

Sec. 49-341. Testing materials and labor to be furnished by permittee.
The license holder doing the work authorized by the permit shall furnish the equipment, material, power or labor necessary for the inspections and tests required by this article.

Sec. 49-342. Testing of waste, vent and rainwater systems.
Plumbing drainage, venting and rainwater systems shall be tested upon completion of the rough-in piping installation by water or air and proved water or air tight: provided that exterior rainwater leaders and perforated or open joint drain tile will not require testing.

(a) Water test.

(1) The water test shall be applied to the soil, waste, vent and rainwater systems inside of the building in its entirety or in sections.

(2) If applied to the entire system, all openings in the piping shall be tightly closed except the highest opening above the roof or other highest point and the system filled with water to the highest point of overflow. All dead ends shall be relieved of air during the process of filling, whether in sections or entirety.

(3) If the system is to be tested in sections, each opening shall be tightly closed except the highest opening in the section under test, and each section shall be filled with water and dead ends relieved of air, but no section shall be tested with less than a ten (10) foot head of water. In testing successive sections, the upper ten feet of the next preceding section shall be tested, so that the entire system will be submitted to a test of at least a ten-foot head of water.

(4) The building drain shall be subjected to a water test identical to that above with at least a ten (10) foot head of water, when the building drain or groundwork is to be covered.

(5) All piping must be installed and tested to a point not less than ten (10) feet above the finished floor of the basement or ground floor, whichever the case may be. The water shall be kept in the system or in the portion under test for a minimum of 15 minutes before inspections start. The system shall then be tight at all points.

(b) Air test.

(1) The air test shall be made by attaching the air compressor, or test apparatus, to any suitable opening, and closing all other inlets and outlets to the system.

(2) Air shall be forced into the system until there is a uniform pressure sufficient to balance a column of mercury ten (10) inches in height, or five (5) psig on the entire system. Under any tests the air pressure shall remain constant for no less than 15 minutes without any further addition of air. Air testing of plastic pipe and fittings shall be in accordance with manufacturer's recommendations.

(c) Length of test. Under any test, the water or air pressure shall remain constant for no less than 15 minutes without further addition; provided that, when testing with water in temperatures below 32 degrees Fahrenheit, the master plumber may release the water from the system after one hour from the requested time of inspection if such inspection has not been made.

(d) Required tests. Testing is required in the following situations:

(1) On all new installations.

(2) Remodeling, alteration or renovation where more than 50 percent of the existing system is repaired or replaced and no new fixtures are added.

(3) Existing system when more than sixty (60) feet developed length of pipe and fittings is added.

(4) Existing systems when more than six (6) fixtures are added.

Sec. 49-343. Testing of pressure soil, waste and sewers.
Testing of all pressure soil, waste and sewer lines shall be as follows:

(a) When the discharge piping is concealed or is more than twenty (20) feet in developed length a separate test of fifty (50) psig for fifteen (15) minutes will be required on that portion from the pump to the connection to the gravity piping.

(b) A hydrostatic test shall be used for this test.

(c) The portion of the pressure waste piping extended outside of the building line more than four (4) feet shall be schedule 80 PVC pipe and fittings.

Sec. 49-344. Water supply system test.
All water piping interior and exterior shall be tested as follows:

(a) Interior above grade water supply systems and any branches that exit the building to serve a yard hydrant, pond, pool or other exterior water needs shall be tested in sections or when the system is complete. The test shall consist of filling the system with water or air to 100 psig for 15 minutes with no loss of pressure.

(b) Water service piping for structures or buildings shall be tested as follows:

(1) All copper water services larger than 1 inch used for domestic purposes shall be tested by a hydrostatic test or air pressure to not less than 50 psig above the main pressure for one (1) hour.

(2) All ductile iron water services used for domestic purposes shall have a hydrostatic test of two-hundred (200) psig for 1 hour.

(3) All water services used for fire protection shall have a hydrostatic test of two-hundred (200) psig for 2 hours.

If water is used for testing, it shall be obtained from a potable source.

Sec. 49-345. Unsanitary premises--Notice to correct conditions; abatement by plumbing inspector; testing of plumbing and drainage system.

(a) When any building or premises has been inspected by the plumbing inspector, and the plumbing is found to be defective or unsanitary to such an extent that it constitutes a menace to public health or safety, notice to that effect shall be served upon the owner, or his agent, and the said notice shall specify the character of repairs, alterations, or improvements necessary to remove or cure such defective or unsanitary conditions. If such repairs and alterations as specified in said notice are not commenced in good faith within five days from date of service of such notice, and completed within a reasonable time, the plumbing inspector or his assistant may proceed against the owner or his agent for maintaining a public nuisance.

(b) A test such as directed by the plumbing inspector shall be used in testing the sanitary condition of a plumbing and drainage system of any building or premises when there is a reason to believe that it has become defective. In buildings or premises where a list of deficiencies has been issued by a housing inspector of the

Planning Department which includes violation of the plumbing code or because of unsanitary condition of the plumbing system, or parts thereof, the alterations or repair of such system shall not be considered as repairs, but as new work and permits for such work will be required. When a demolition order has been issued for a building or premise~~s~~ by a housing inspector of the Planning Department, the plumbing system shall be required to meet all current standards of this chapter.

Sec. 49-346. Records.
The permits and inspections division shall keep complete records of all inspections and tests made by the plumbing inspector. The permits and inspections division shall keep records showing the location of the building sewer connections, two-way clean-outs, and back-water valves installed in plumbing systems for which a permit has been issued.

Sec. 49-347. Manufactured homes.
All manufactured homes constructed to a national A.N.S.I. A40 code for plumbing and having a H.U.D. seal of approval shall not require a water or air test nor require a permit for the portion of the plumbing system that is factory installed. All connections and material required for final installation of the plumbing system shall be installed in accordance with this chapter.

Sec. 49-348. Pre-fabricated buildings.
Any building structure built in a factory is required to have the plumbing installed in accordance to requirements of this chapter.

(a) All piping shall be made visible for inspection to determine that the work performed off-site meets these requirements.

(b) A permit shall be required for each fixture the same as if built on-site.

(c) A water or air test shall be performed on the entire system of waste, vent and water by a licensed master plumber.

(d) All on-site work shall be done by a licensed master plumber.

Sec. 49-349. Test Gauges.
Dial gauges used in the testing of plumbing shall have the following pressure graduations or increments.

(a) Tests requiring ten (10) psi or less a 1/10 increments or less.

(b) Tests requiring more then ten (10) but less than one hundred (100) psi a two (2) psi increments or less.

(c) Tests requiring more than one hundred (100) psi a two (2) percent or less of the required test pressure.

(d) Test gauges shall have a pressure range not greater than twice the required test pressure.

Sections. 49-350--49-399 Reserved.

ARTICLE IV. DEFINITIONS AND ABBREVIATIONS

Sec. 49-400. Definitions.
For the purposes of this chapter, the following words and phrases shall have the meanings respectively ascribed to them. Words and phrases not defined shall have ordinarily accepted meanings such as the context implies. Definitions as they apply to the installation of septic systems can be found in Article XXI.

Accessible (& Readily Accessible):

(a) Accessible - having access which first may require the removal of an access panel, door, or similar obstruction.

(b) Readily accessible - having direct access without the necessity of removing and panel, door, or similar obstruction.

Air break: An indirect waste from a fixture, appliance or appurtenance which discharges into another fixture, receptacle or interceptor at a point below the flood rim of the receiving fixture, receptacle or interceptor.

Air gap: The unobstructed vertical distance through the free atmosphere between the lowest opening from any pipe or faucet conveying water to a tank, plumbing fixture, receptor or other assembly and the flood level rim of the receptacle. These vertical, physical separations shall be at least twice the diameter of the water supply outlet, never less than one (1) inches.

Alignment: (As pertaining to pipe and/or pipe fitting connections) When the centerlines of connected pipe and/or pipe fittings join to form a single continuous line without deflection at the point of the connection.

Apprentice plumber: A person who has entered into a written indentured apprenticeship agreement through a program which is certified by the City's plumbing board and which provides for training through employment and classroom related instruction.

Approved Backflow: Assembly: A backflow prevention device approved by the Foundation for Cross-Connection Control and Hydraulic University of Southern California.

Area drain: A receptacle installed to collect surface or rain water from an open area.

Area inlet: A connection between the surface of the ground and a sewer for the admission of surface or storm water.

Automatic grease removal device: A device which automatically, on a time-controlled or event-controlled basis, separates the grease from grease laden waste and then transfers that grease to a separate container.

Backflow: The unwanted reverse flow of liquids in a piping system.

Backflow preventer (branch): A backflow preventer installed on a branch of a potable water piping system in such a manner as to prevent backflow of water from fixtures, appurtenances and appliances connected to that branch from entering, by backflow, into the other mains or branches within the building. Water downstream of a branch backflow preventer will be considered “non-potable” water.

Backflow preventer (dedicated): A backflow preventer installed in such a manner as to prevent backflow of water from an individual fixture, appurtenance or appliance to other fixtures, appurtenances and/or appliances connected to the other mains or branches within the building. Water downstream of a dedicated backflow preventer will be considered “non-potable” only if the isolated fixture could potentially cause hazardous material to contaminate the remainder of the domestic water system.

Backflow preventer (master): A backflow preventer installed in such a manner as to prevent water from the building water piping system from entering, by backflow, into the building water service. Water in a branch or main downstream of a master backflow preventer will be considered “potable” water until a branch or dedicated backflow preventer is encountered.

Backpressure: A condition where a pressure higher than the supply piping pressure is created by an individual fixture, appurtenance or appliance thus creating a potential reversal of flow into the supply piping system.

Back siphonage: Backflow due to a vacuum or partial vacuum in a water supply system.

Backwater valve: A device installed in a drainage system to prevent backflow.

Battery vent: An alternative method of venting of a battery of floor outlet fixtures by using a circuit loop and/or relief vent

Boiler blow-off: An outlet on a boiler to permit emptying or discharging of water or sediment in the boiler.

Branch (general): Any part of the piping system other than the main, riser or stack.

Branch Interval: A length of soil or waste stack corresponding to a single building story height, but not less than eight (8) feet, to which the horizontal branches from a single floor or story of a structure are connected to the stack.

Branch (soil or waste): Any part of the soil or waste piping system that has a vent of smaller pipe size than the soil or waste pipe.

Branch (vent): A vent connecting one or more individual vents to a main vent that is extended through the roof.

Branch waste: Any part of the soil or waste piping system that is vented by a pipe of a smaller size than the soil or waste pipe.

Building: Any structure erected for the support, shelter, or enclosure of persons, animals, chattels, or movable property of any kind.

Building drain: That part of the lowest horizontal piping of a building drainage system which receives the discharge from soil, waste, and other drainage pipes inside the walls of any structure and conveys the same to the building sewer at a point four feet outside of the outer face of a building wall or just beyond the outlet of an exterior grease interceptor.

Building sewer (sanitary): That part of the horizontal piping of a building's sanitary drainage system, conveying the drainage of but one building site, beginning at the connection to the building drain (four feet outside the outer face of a building wall) to its connection with a public or private main sewer or private sewage disposal system.

Building storm drain: That part of the lowest horizontal piping of a building storm drainage system which receives the discharge from roof drains and area drains and conveys the same to the building storm sewer at a point four feet outside the outer face of a building wall.

Building storm sewer: That part of the horizontal piping of a building's storm drainage system, conveying the drainage of but one building site, beginning at the connection to the building storm drain (four feet outside the outer face of a building wall) to its connection with a public or private main storm sewer or open waterway.

Butcher Shop: An establishment that cuts, trims, wraps or handles non-processed meats, poultry or fish.

Cesspool: An excavation in the ground constructed to receive the discharge of a plumbing system or part thereof, so designed and constructed as to permit seepage of its contents into the ground through its sides and bottom.

City sewer: Any sewer maintained by the city.

Circuit vent: A system of venting a group of fixtures by connecting the individual fixture vents to a single properly sized horizontal vent which is then connected to a vent stack.

Code: Regulations and their subsequent amendments or any rule or regulation lawfully adopted to control plumbing work.

Combined sewer: A sewer designed to receive both storm water and sewage.

Commercial kitchen: Establishments such as restaurants, hotel kitchens, hospitals, school kitchens, bars, factory

cafeterias, clubs and any establishment that in the preparation of food will produce grease laden waste.

Common sewer: A sewer in which all abutting property has equal rights.

Common Vent: The vertical vent portion serving two fixture drains, which are installed at the same level in a vertical stack.

Containment: Limiting the potential contamination of a public water system, by a potential source of contamination within a building, by installing an approved master backflow prevention device.

Contamination: Introduction of any material that would cause water from a potable water source to be a hazard to human health.

Continuous waste and vent: A vertical soil or waste pipe terminating at its upper end in a tee-shaped fitting having a 90-degree branch to which a fixture trap may be connected, the top of which fitting continues vertically as a vent pipe to serve the trap.

Cook: The preparation of food on a grill, stove, deep fryer, steam kettle, oven or other similar devices. Warming food already prepared is not cooking.

Cross-connection: Any actual or potential connection between the potable water supply and a source of contamination or pollution. (The terms "interconnection" and "cross connection" are interchangeable and have the same definition).

Crown: The inside top of a horizontal pipe.

Crown Weir (of a plumbing trap): That point in a P-trap, between the dip of the trap and the outlet, where the flow of liquid changes from vertical to horizontal, thus creating the upper level of the trap seal.

Daylight (or daylighting): (As pertaining to the discharge of liquid from a piping system) The free and unrestricted discharge of liquid from a piping system at any height above any surface that is open to the atmosphere

Dead end: A branch leading from a soil, waste or vent pipe, building drain, or building sewer, which is terminated by a plug or other closed fitting at a developed distance of 10 feet or more. A dead end is also classified as an extension for future connection, or as an extension of a clean out for accessibility.

Deli: An establishment that cuts or handles processed meats, poultry, fish or cooks food.

Developed length: Of a pipe, the length measured along the centerline of the pipe and fittings.

Domestic sewage: The water-borne wastes derived from ordinary living processes.

Drainage system: All the piping within public or private premises, which conveys sewage, rainwater, or other types of liquid wastes to a legal point of disposal.

Dual vent (sometimes called unit vent or common vent): A vent installation so arranged that a single pipe would serve two traps at the same point.

Durham system: An installation of soil, waste, and vent pipes constructed of galvanized wrought iron, galvanized steel or cast iron pipe joined together by means of screw recessed type fittings.

Dwelling unit: Any building that contains one dwelling unit used, intended, or designed to be built, used, rented, leased, let or hired out to be occupied, or that is occupied for living purposes.

Effluent: The discharge at the downstream end of a sewer line and/or the discharge from a septic tank or other

sewage treatment unit.

Existing work: Those portions of a plumbing system, which have been installed prior to the current or contemplated additions, alterations, or corrections.

Family: One or more persons living and cooking together as a housekeeping unit in an individual dwelling unit. A family may include a number of persons, not exceeding three, who are not related by blood or marriage.

Final fixture connection: The connection at the point where the fixture or fixture trap is attached to the roughed-in work (examples: water closet connected to closet flange or carrier - sink, lavatory, etc. trap connected to a waste arm).

Fixture branch: A drain serving more than one fixtures which discharges into another drain.

Fixture drain: A drain from a fixture trap to the connection of the drain with any other drain pipe.

Fixture unit: A measure of the probable discharge by various plumbing fixtures determined by the volume rate of discharge, the duration of a single discharge operation and the average time between consecutive operations based on the premise that a single fixture unit is equal to 7-1/2 gallons or one cubic foot of liquid discharge per minute.

Flood level: In reference to a plumbing fixture, the level at which the water begins to overflow the top or rim of a fixture.

Floor drain: An opening or receptacle located at approximately floor level, which is connected to a trap, to receive the washings or surplus wastewater from a floor surface.

Floor sink: An opening or receptacle usually made of enameled cast iron located at approximately floor level which is connected to a trap, to receive the discharge from indirect waste and floor drainage.

Flushometer Valve: A device actuated by direct water pressure, which discharges a predetermined quantity of water to fixtures for flushing purposes.

Free Standing Restaurant: A building that has as its only occupant a restaurant, where food is cooked and or served.

Grade: The amount of slope or fall of a pipe in reference to a horizontal plane expressed as "(percent) grade. Formula: the percent grade = (Total Drop [in feet] ÷ Total Length [in feet]) × 100 .

Gray water: Waste discharged from plumbing fixtures which are used only for the purpose of bathing, clothes washing and /or hand washing and which do not receive or discharge solids, chemicals, food scraps, animal waste, human waste or body fluids.

Grease interceptor: A passive interceptor having a rated flow exceeding 50 gpm and that is located outside the building.

Grease trap: A passive interceptor having a rated flow of 50 gpm or less and that is located inside the building.

Ground water: Water derived from beneath the surface of the ground.

Ground work: That part of the building drainage system that is installed in an excavation below the basement or ground floor.

Hard solder (Brazing): Any joint obtained by joining of metal parts with alloys which melt at temperatures higher than 840 degrees F, but lower than the melting temperature of the parts to be joined.

Horizontal pipe: Any pipe installed in a horizontal position or which makes an angle of less than forty-five (45)

degrees with the horizontal or more than 45 degrees with the vertical.

Hot Water: Water at a temperature of one hundred twenty (120) degrees F but not more than one hundred forty (140) F. Water of a temperature higher than one hundred forty degrees F shall be labeled as such at all applicable pipes, fixtures and appurtenances.

Indirect waste: A waste pipe, which does not connect directly with the building drainage system, but discharges into it through a properly trapped and vented fixture or receptacle. (The terms "indirect waste" and "special waste pipe" are interchangeable and have the same definition).

Interceptor: A device designed and installed so as to separate and retain deleterious, hazardous, or undesirable matter from the normal wastes and permit normal sewage or waste water to discharge into the disposal terminal by gravity.

Interconnection: (The terms "interconnection" and "cross connection" are interchangeable and have the same definition.)
Invert: The inside bottom of a horizontal pipe.

Isolation: The practice of installing a cross connection control device or air gap at every outlet in a water distribution system, downstream of the water meter.

Journeyman plumber: A person who installs, alters, assembles, disassembles or repairs plumbing and drainage systems or parts thereof and who is registered and the legal possessor of a journeyman plumber's license as provided for in this chapter.

Kitchen equipment: Pots, pans, fryer baskets, baking sheets or pans, meat slicers and similar equipment used in the cooking and/or preparation of food.

Lawn sprinkler contractor: Any person who is registered and the legal possessor of a lawn sprinkler contractor's license as provided for in this chapter and who is engaged in the business of installing, altering, replacing, repairing, or relocating any lawn sprinkler systems or parts thereof, or who sets himself out as willing to perform such work himself or through his employees.

Local vent: A ventilation pipe through which foul air is removed from a room where plumbing fixtures are installed.

Loop vent: A system of venting a group of fixtures by connecting the individual fixture vents to a single properly sized horizontal vent which is then connected to a stack vent.

Looped vent: (The terms "Looped vent" and "Return vent" are interchangeable and have the same definition.) An inverted emergency vent extending above the flood level of the fixture and returned back below the floor and connected to a main vent, soil vent, waste vent, or branch vent in such a manner that condensation will not collect in the lowest horizontal portion of such vent

Macerating toilet system: A sewage ejector pump package comprised of a sump with macerating pump and connections for a water closet and other plumbing fixtures.

Main: Of any system of continuous piping, the principal artery of the system to which branches may be connected.

Master plumber: Any person who is engaged in the business of plumbing, or who does, or who sets himself out as willing to do personally, or through his employees, any work or service in connection with the installation, alteration, or repair of plumbing and drainage systems or parts thereof and who is registered, licensed, and bonded as provided for in this chapter.

Meat Cutting: The cutting, trimming, wrapping or other handling of non-processed meats, poultry or fish.

Medical Office: A building or a portion of a building containing offices, examination rooms, laboratories and/or medical diagnostic equipment for the purpose of physical examination, diagnosis and/or treatment of patients by those trained and licensed in the medical profession.

Minor repairs: The repair of leaks in supply pipes, traps, or drains, and the repair of all devices, appurtenances, fixtures, faucets, and valves defined herein as plumbing work.

Non-potable water: Any water which does not meet the definition of potable water.

Nuisance: Any act or condition created, permitted, allowed, or continued on any property, public or private, by any person, business or organization that is determined to be detrimental to the life, health or physical well-being of any or all of the inhabitants of this city.

Occupied nonresidential building: Any structure in which the interior climate, lighting and/or other conditions have been modified for the specific purpose of accommodating any regular human activity other than habitation.

Plumbing: The business, trade, or work having to do with the installation, alteration, or repair of plumbing and drainage systems or part thereof.

Plumbing appliance: Any one of a special class of plumbing fixtures, which is intended to perform a special function. Its operation or control can be dependent upon one or more energized components, such as motors, controls, heating elements, or pressure or temperature sensing elements. Such fixtures can be manually adjusted or controlled by the user or operator, or can operate automatically through one or more of the following actions: a time cycle, a temperature range, or a pressure range.

Plumbing appurtenance: A manufactured device or prefabricated assembly of component parts which is an adjunct to the basic piping system and plumbing fixtures. An appurtenance does not demand additional water supply, nor does it add any discharge load to a fixture or the drainage system. It is presumed that it performs some useful function in the operation, maintenance, servicing, economy, or safety of the plumbing system.

Plumbing fixture: A receptacle or device which is either permanently or temporarily connected to the water distribution system of the premises, and demands a supply of water there from, or discharges used water, waste materials, or sewage either directly or indirectly to the drainage system of the premises, or requires both a water supply connection and a discharge to the drainage system of the premises.

Plumbing system: Includes any or all of the following:

(a) The entire water distribution system from the water main in the street and through the premises and building including the point-of-use fixture, device or appurtenance.

(b) All plumbing pipes, fixtures, devices, appliances and appurtenances used for the receiving and disposal of sewage and water-borne waste to the sewers in the street or alley or other approved point of disposal.

(c) All pipes and fittings used for the receiving and disposal of rainwater that are placed within a building to an approved point of disposal on the surface or the sewer in the street or alley.

(d) All pipes in connection with vent, gas, vapor, gasoline or waste of any kind, which may be discharged into or vented from drains or sewers.

(e) All domestic hot water storage tanks and automatic or non-automatic electric, gas or oil-fired domestic water heaters up to and including 120-gallon capacity, with connections and vents.

Pollution: A material that, if allowed to enter a potable water system, could degrade the esthetic property of water with taste, color or odor, but would not be hazardous to human health.

Potable water:

(a) Water from the water mains under the jurisdiction of the Metropolitan Utilities District.

(b) Water from wells that have been tested and approved by the Douglas County health department.

Private: In the classification of plumbing fixtures, fixtures in residences and apartments and fixtures in private bath rooms of hotels and similar installations where the fixtures are intended for the use of a family or an individual.

Private Sewer: A sewer main, which receives the discharge from one or more building sewer and conveys it to a public sewer or private sewage disposal system.

Product Water: Any water downstream of a reduced pressure principle backflow preventer used in the production of food or drink.

Public sewer: A sewer in public right-of-way or on public easements.

Public use: As applied to toilet rooms and bath rooms, such rooms used by employees, occupants, visitors, or patrons, in or about any premises; furthermore, the term "public use" shall apply to toilet rooms or bath rooms which may be kept locked and for which several occupants or employees on the premises possess keys and have access thereto.

Rain Water: Water that has fallen in drops condensed from vapor in the atmosphere that has not collected soluble matter.

Rainwater Harvesting: The process of collecting precipitation in holding tanks located in the interior or exterior of a structure or building for the purpose of using the water for irrigation or other non-potable or gray water.

Relief Vents: A relief vent is a vent whose primary function is to provide for circulation of air between the vent stack and the soil or waste stack.

Return vent: (The terms "Return vent" and "Looped vent" are interchangeable and have the same definition.) An inverted emergency vent extending above the flood level of the fixture and returned back below the floor and connected to a main vent, soil vent, waste vent, or branch vent in such a manner that condensation will not collect in the lowest horizontal portion of such vent.

Revent or back vent: That part of the venting system which connects directly with an individual fixture trap, underneath or back of the fixture, and extends either to the main vent or branch vent pipe.

Roof drain: An approved drain properly installed in the roof of a building and connected to a vertical line of piping used only to carry off rainwater from exposed surfaces of the building and to carry same to an approved point of disposal outside of the walls of the building or, under special circumstances provided for in this chapter, to an increased portion of the building drain.

Roughing in: The installation of all parts of the plumbing system, which can be completed prior to the installation of fixtures. This includes drainage, water supply, gas piping, vent piping, and the necessary fixture supports

Sanitary drainage system: A piping system designed or used only for conveying liquid or water-borne waste from plumbing fixtures.

Sanitary sewer: A sewer which carries sewage and excludes storm, surface, and ground water.

Septic tank: A reservoir or tank which receives crude sewage and, by bacterial action and sedimentation, affects a process of clarification and decomposition of solids.

Sewage: Any liquid waste containing animal or vegetable matter in suspension or solution, and may include liquids

from laboratories or commercial and industrial institutions.

Slope: The amount of fall of the invert of a sewer expressed in inches per foot.

Soil line: Any pipe which conveys to the building drain or building sewer the discharge of water closets or the discharge of any other fixture receiving fecal matter, with or without the discharge from other fixtures.

Soil pipe: A commonly used term referring to cast iron pipe and fittings utilized in the installation of sanitary drainage piping systems.

Spa: A unit designed for therapeutic use which is not drained, cleaned or refilled for each individual. It may include, but is not limited to, hydro jet circulation, hot water, cold water, mineral baths, air induction bubbles, or any combination thereof. Industry terminology for a spa includes, but is not limited to, therapeutic pool, hydrotherapy pool, whirlpool, hot spa, etc.
Special sewage: Any waste other than sanitary sewage.

Special waste pipe: A waste pipe which does not connect directly with the building drainage system but discharges into it through a properly trapped fixture or receptacle. (The terms "special waste pipe" and "indirect waste" are interchangeable and have the same definition).

Stack: The general term referring to any vertical line of soil, waste, special waste, vent pipe, or internal roof drain piping.

Stack vent: The extension of a soil or waste stack vertically above the fixture connection as a vent stack to a point at least three inches above the flood rim of the highest fixture where it is connected to a main vent or until it is extended through the roof.

Stack venting: Is a method of venting a fixture or fixtures through the soil or waste stack.

Storm Water: Water that has fallen as heavy rain with the potential to collect on, or flow or across, surfaces of structures the ground or paved areas.

Stub: A partial building sewer extending from the public sewer in the street toward the property line, but not beyond said property line.

Sub-soil drain: That part of the drainage system which conveys groundwater or seepage water from the foot of walls or below the basement floor under buildings to approved point of disposal outside of the walls of a building, or to the storm drain within the building.

Sump: A tank or pit which receives sewage or liquid waste, located below the normal grade of the gravity system and which must be emptied by mechanical means.

Tempered Water: Water of a temperature of ninety (90) degrees F. to one hundred nineteen (119) degrees F.

Townhouse: A single-family dwelling unit constructed in a group of two or more attached units in which each unit extends from foundation to roof and with open space on at least two sides.

Toxic: Any substance that would cause illness or death to any person or animal ingesting it.
Trap: As pertaining to plumbing, a fitting or device, so designed and constructed as to provide a liquid seal, which will prevent the passage of air or gas through it without materially affecting the flow of sewage or liquid wastes.

Trap seal: The maximum vertical depth of liquid that a trap will retain, measured between the crown weir and the dip of the trap.

Trench drain: A long, narrow manufactured receptor designed to receive and convey to the drainage system, run-off water or other liquids, from a broad flat area inside or immediately adjacent to the building structure.

Utensils: Plates, forks, knives, spoons, spatulas and similar utensils used in the cooking and/or preparation of food.

Vent pipe: Any pipe or system of pipes providing free circulation of air to any trap, branch, or main of a plumbing system, in order to prevent trap siphonage or back pressure.

Vent stack or main vent: A vent pipe extending vertically with or without changes of direction and which acts as a terminal for other vents and terminates through the roof or connects with the main soil or waste stack-vent at a point which is at least three inches above the flood level of the highest fixture.

Vent system: A pipe or pipes installed to provide a flow of air to or from a drainage system or to provide a circulation of air within such system.

Vertical: Any pipe or fitting that makes an angle of forty-five (45) degrees or more above the horizontal.

Waste pipe: Any pipe which receives the discharge of any fixture, except water closets or any other fixture receiving fecal matter, and conveys same to the building drain, soil pipe, soil stack, or waste stack.

Water conditioning appliance: Apparatus and equipment which is designed to soften or filter or change the mineral content of water where such apparatus and equipment are connected to a water supply system and is not connected to the drainage system. The term "connected to a water supply system" shall not be considered to include connections to existing faucets.

Water, high purity water system: Special piping systems designed to contain and distribute water of a highly purified nature including deionized water or the product of a reverse osmosis or a water distillation system but not including water softened by the common process of ion exchange.

Water purveyor: The owner and/or operator of a public water system that supplies potable water for drinking, culinary purposes or body contact.

Water service: A water service line is the piping and related appurtenances installed from the water purveyor's water main to the outlet connection of the first shut-off device downstream of the meter or meters or the first shut-off device inside of the building, whichever is farther downstream. When the service is used for fire protection the service is from the main to the outlet of the backflow preventers.

Water supply, approved: A water supply that meets the requirements for potable water as defined by the health department for drinking, culinary purposes and body contact.

Water supply, auxiliary: A water supply on or available to a building that is not under the control of the water purveyor. Auxiliary water supply shall include, but not be limited to water from another purveyor's public potable water supply or any natural source(s), such as a well, spring, river, stream, harbor, used waters or industrial fluids.

Water supply system: The water service line, water distribution piping and the necessary connections to deliver water to all fixtures and appurtenances in a building or on the premises. The water supply system is a part of the plumbing system

Wet vent: That portion of a vent pipe through which liquid wastes flow.

Workmanship: (As it pertains to this chapter), The use of standard and/or approved practices in the installation of plumbing systems resulting in completed systems which appear and perform within all tolerances acceptable by industry standards and all sections of this chapter.

Sec. 49-401. Abbreviations.

The following is a listing of the abbreviations, which are included in this chapter.
ABS: Acrylonitrile-butadiene-styrene

ANSI: American National Standards Institute
ASME: American Society of Mechanical Engineers
ASPE: American Society of Plumbing Engineers
ASSE: American Society of Sanitary Engineers
ASTM: American Society for Testing and Materials
BTU: British Thermal Unit
CISPI: Cast Iron Soil Pipe Institute
CPVC: Chlorinated Polyvinyl chloride
DWV: Drainage waste and vent
Ell: Elbow
F: Fahrenheit
GPH: Gallons per hour
GPM: Gallons per minute
ID: Inside diameter
IPS: Iron pipe size (Also called NPS)
NFPA: National Fire Protection Association
NH: No Hub
NPS: Nominal Pipe Size (Also called IPS)
OD: Outside diameter
PDI: Plumbing Drainage Institute
PIV: Post indicator valve
Ppm: Parts per million
PRV: Pressure reducing valve
PSI: Pounds per square inch
PSIG: Pounds per square inch gauge
PVC: Polyvinyl chloride
RCP: Reinforced concrete pipe
SS: Stainless Steel
Sv: Service
UL: Underwriter's Laboratory
USASI: USA Standards Institute
VCP: Vitrified clay pipe
XH: Extra heavy
XHCI: Extra heavy cast iron
Sections 49-402—49—499 Reserved.

ARTICLE V GENERAL REGULATIONS

Sec. 49-501. Disposal of wastes.
It shall be unlawful for any person to cause, suffer, or permit, in or upon any building or premises over which he has supervision or control, the disposal of sewage, human excrement, or other wastes, in any place or manner except through and by means of an approved plumbing and drainage system installed and maintained in accordance with the provisions of this chapter, and amendments thereto.

Sec. 49-502. Connection of fixtures to soil or waste system.
All plumbing fixtures, drains, appurtenances, and appliances which are used to receive and discharge wastes or sewage shall be connected to soil or waste systems of the building or premises, except as provided for in Article X.

Sec. 49-503. Installation of used equipment.
Any used plumbing equipment not approved by the Chief Plumbing Inspector because of wear, damage, defects, or sanitary hazards shall not be used for plumbing purposes.

Sec. 49-504. Prohibited fittings.
No cast-iron double hub fitting shall be used on any soil or waste line. Street fittings may be used on only copper, ABS and PVC systems. The drilling and burning of holes in or tapping of house drains, soil, waste, vent or water pipes, the use of saddle hubs and sleeves, and the welding or brazing of parts into pipes to make fittings are prohibited; provided that extruded joints for potable water, as approved in this chapter, are not prohibited. Cup or overcast joints, long screws, long screw and lock nut, inverted hub, sleeves, bands, saddle hubs, welding or brazing, either in soil, waste or vent lines, are prohibited. See section 49- 1406(i) on restricted use of sanitary crosses.

Sec. 49-505. Fittings for change in direction.
Changes in direction in drainage piping shall be made by the appropriate use of forty-five degree Y's, long or short sweep quarter bends, sixth, eighth, or sixteenth bends, or by a combination of these or equivalent fittings. Exception:

(a) Sanitary tees and short quarter bends may be used in drainage lines only where the direction of flow is from the horizontal to the vertical or where structural conditions prohibit the use of other combination of fittings.

b) Long or short sweep quarter bends shall not be installed in drainage piping closer than twelve (12) inches center to center to any other long or short sweep on pipe sizes 2 inches and smaller or any other combination of fittings that would obstruct or retard the flow of waste or sewage.

(c) No Hub and bell and spigot cast iron short quarter bends may be used where the direction of flow is from the vertical to horizontal when the vertical distance from the center of the short quarter bend to the fixture opening is seventy-two (72) inches or less on pipe sizes two (2) inches and smaller.

Sec. 49-506. Minimum slopes for horizontal piping.
Horizontal piping shall be run in practical alignment. The minimum slopes shall be as follows:

(a) For pipes of 1¼ to two inches diameter inclusive, not less than one-quarter inch fall per foot.

(b) For pipes of 2½ inches and larger in diameter, see section 49-909.

Waste and soil piping with less than required by section 49-909 and designed by a registered engineer may be used.

Sec. 49-507. Support of piping aboveground.
(a) Cast-iron bell and spigot.

(1) Horizontal pipe. All horizontal pipes shall be supported at five (5) foot intervals; except that length of pipe exceeding five (5) feet in length may be supported at ten (10) foot intervals. Supports shall be adequate to maintain alignment and prevent sagging, and shall be placed at the joint where practicable. (See figure 507(a)(1).

(2) Vertical pipe. All vertical pipes should be secured at sufficiently close intervals (maximum interval of 12 feet) to keep the system in alignment and to adequately support the weight of the pipe and its contents. Floor clamps, sometimes called friction clamps, are required for vertical piping in multi-story structures at each floor. (See Figure 507(a)(1))

(b) Hubless cast iron.

(1) Horizontal pipe. All horizontal pipe shall be supported on both sides of each joint when the pipe length exceeds four (4) feet. When possible the hanger should be within 18 inches of the joint when that is not possible the distance between the hangers shall not be less than 60 percent of the length of the pipe. A single hanger will be required for pipe and fittings four (4) feet or less in length.

Adequate provision shall be made to prevent shear. Where components are suspended by non-rigid hangers in excess of 18 inches in length, the hangers shall be suitably braced against movement horizontally (sway bracing). Closet bends, traps, trap-arms and similar branches must be firmly secured against movement in any direction.

Closet bends shall be stabilized by firmly strapping and blocking. Pipe and fittings five (5) inches and larger shall be braced to prevent horizontal movement. Secure every branch opening or change of direction by the use of braces, blocks, rodding or other suitable method, to prevent movement. (See figure 507(b)(1) 1, 2 and 3)

Where components are suspended by non-rigid hangers in excess of 18 inches in length, the hangers shall be suitably braced against movement horizontally (sway bracing). Closet bends, traps, trap-arms and similar branches must be firmly secured against movement in any direction. (See figure 507(b)(1) (2)

Closet bends shall be stabilized by firmly strapping and blocking.

Pipe and fittings five (5) inches and larger shall be braced to prevent horizontal movement. Secure every branch opening or change of direction by the use of braces, blocks, rodding or other suitable method, to prevent movement. (See figure 507(b)(1) 1,2 and 3

(2) Vertical pipe. All vertical components shall be secured at each stack base and at sufficiently close intervals (maximum interval of ten feet) to keep the system in alignment and to adequately support the weight of the pipe required for vertical piping in multi-story structures at each floor. (See figure 507(b)(2)

(c) Steel pipe.

(1) Horizontal pipe. All screwed pipe (IPS) shall be supported at approximately ten-foot intervals for piping three-quarters inch and smaller in diameter and 12-foot intervals for pipe one inch and larger in diameter.

(2) Vertical pipe. All screwed pipe (IPS) shall be supported at not less than every other story height.

(d) Copper tubing.

(1) Horizontal tubing. All copper tubing shall be supported at approximately six-foot intervals for piping 1½ inch and smaller in diameter and ten (10) feet intervals for piping two inches and larger in diameter.

(2) Vertical tubing. All copper tubing ¾ inch and smaller in diameter shall be supported at each story or at maximum intervals of four (4) feet and at each story or at maximum intervals of ten (10) feet for piping 1 inches and larger in diameter.

(3) All water lines shall have a minimum spacing of three (3) inches between parallel lines.

(e) Plastic or nonmetallic waste piping.

(1) Horizontal pipe. Plastic pipe shall be supported at intervals not to exceed four feet. See figure 507(e)(1)

(2) Vertical pipe. Plastic pipe two (2) inches and less shall be supported at intervals not to exceed four feet. Sizes above two (2) inches in diameter shall be supported at intervals not to exceed eight feet (See figure 507(e)(2))

(f) Cross-linked Polyethylene.

(1) Horizontal runs. Shall be supported separately at intervals not to exceed thirty-two (32) inches with a minimum spacing of three (3) inches between parallel lines.

(2) Vertical pipe. Shall be supported separately at intervals not to exceed forty-eight (48) inches with a minimum spacing of three (3) inches between parallel lines.

(3) A bend support is required for ½ tubing that bends within six (6) inches of a connection and within ten (10) inches for ¾ and 1 inch tubing.

(4) When installing runs of tubing, allow 1/8 to 3/16 longitudinal clearance per foot of run to accommodate thermal expansion.

(g) Chlorinated Polyvinyl Chloride (CPVC)

(1) Horizontal runs. Shall be supported separately at intervals not to exceed thirty-two (32) inches with minimum spacing of three (3) inches between parallel lines.

(2) Vertical pipe. Shall be supported separately at intervals not to exceed forty-eight (48) inches with a minimum spacing of three (3) inches between parallel lines.

(3) When installing runs of tubing, allow 1/8 to 3/16 longitudinal clearance per foot of run to accommodate thermal expansion.

Sec. 49-508. Dead ends; soil or waste lines for future use.
In the installation or removal of any plumbing or drainage system, dead ends shall be avoided, except where necessary to extend a cleanout so as to be accessible. Any horizontal or vertical soil or waste line with a developed length of more than ten (10) feet from a building drain shall be vented with a minimum one-half of the diameter of the pipe, but not more than four (4) inches and this vent shall be installed at the same time as the installation of the soil or waste piping.

Sec. 49-509. Protection of pipes from breakage or corrosion.
All pipes passing under or through walls shall be protected from breakage. All pipes passing through or under cinders, concrete or other corrosive materials shall be protected from external corrosion in an approved manner.

Sec. 49-510. Material to be used within four feet of the building.
When it is necessary to dig a trench for any building sewer or branch connection, less than four (4) feet from the foundation of a building, except for foundation or sub-soil drainage system, only approved material shall be permitted to a point not less than four (4) feet from such foundation.

Sec. 49-511. Fixture Openings installed for future use.
(a) For dwelling units, restaurants, food preparation areas and any building designated with sleeping quarters:

1. In no case shall a fixtures opening for future use be permitted in a soil or waste pipe unless a vent is also provided.

2. The fixture opening shall be securely plugged, tested and inspected.

(b) For open-air shopping centers, strip malls, storefronts or commercial buildings with retail or office space in which the shell is constructed and the interior tenant space will be finished at a later date:

1. Vent piping for future soil or waste openings will not be required to be installed at the time of the rough-in and may be installed at the tenant finish. Provided the distance from the building drain or stack does

not exceeded the distance in section 49-508.

2. A vent stack or vent opening shall be within sixty (60) feet developed length from the future fixture opening.

3. The fixture opening shall be securely plugged at the floor line, tested and inspected.

Sec. 49-512. Special application of 90-degree ells.

(a) Side inlet 90-degree ells shall be used only as a vent opening or wet vent for water closets. (See figure 512(a))

(b) Heel inlet 90-degree ells shall be installed vertically.

(c) Twin 90-degree ells may be used when the flow is from horizontal to vertical where structural conditions prohibit the use of combination or wye and eighth bends and both branches are vented. (See figure 512(c).

Sec. 49-513. Floor drains in basements.

The lowest level of any building having a below grade floor area of 1,500 square feet or fraction thereof shall require a minimum of one approved two-inch floor drain. Below grade floor areas in excess of 1,500 square feet shall have an additional two-inch floor drain for each additional 1,500 square feet or fraction thereof with a maximum of four 2-inch floor drains. A three-inch drain may replace two 2-inch drains. A four-inch floor drain may replace four 2-inch floor drains.

Sec. 49-514. Protection of footings.

Trenching running parallel to a footing shall not extend below the line of a 45-degree angle to the bearing plane of the footing or as approved by a registered architect or engineer. (See figure 514.)

Sec. 49-515. Types of materials for plumbing and drainage systems.

Plumbing and drainage systems shall be constructed of the types of materials as provided for in Article VII of this chapter.

Sec. 49-516. Separate plumbing and drainage systems.

(a) The drainage and plumbing system of each new building and of new work installed in an existing building shall be separate and independent of that of any other building, except as provided below, and every building shall have an independent connection with a public or private sewer when available.

(b) Where one building is constructed on the same lot as another building on an interior lot, and no private sewer is available or can be constructed to the rear building through an adjoining alley, court-yard, or driveway, the building drain from the front building may be extended to the rear building and the entire sewer will be construed as being one building drain or building sewer.

(c) No plumbing system, or private sewage disposal system or parts there of, shall be located in any lot other than the lot on which is the site of the building, structure, or premises served by such systems. Except where legal easement has first been established.

Sec. 49-517. Sewer and water service locations.

(a) Water Service: No other pipes, cables or conduits shall be installed in such a way as to prevent easy access to the water service. No other pipes, cables or conduits shall be installed in a parallel trench or in the same trench as the water service with less than a 2' horizontal separation. Pipes, cables or conduits installed above or below the water service and running in a direction perpendicular to the direction of the water service shall be installed with a vertical clearance of not less than 6 inches. All pipes, cables and conduits installed in close proximity to the water service shall conform to all requirements of the Metropolitan Utilities District Water Rules and Regulations and other water purveyors rules and regulations.

(b) Sewer: No other pipes, cables or conduits shall be installed in such a way as to prevent easy access to the sanitary sewer, storm sewer, building storm drain or building drain. No other pipes, cables or conduits shall be installed in a parallel trench or in the same trench as the sanitary sewer, storm sewer, building storm drain or building drain with less than an 18" horizontal separation. Pipes, cables or conduits installed above or below the sanitary sewer, storm sewer, building storm drain or building drain and running in a direction perpendicular to the direction of the drain line shall be installed with a vertical clearance of not less than 6 inches.

Sec. 49-518. Protection of piping against freezing.
No water, vent, soil, waste pipe, fixture trap or laundry trap shall be installed in an exterior wall or permitted outside a building unless adequate provisions are made to protect same from freezing.

The building drain shall exit the building a minimum of three (3) feet below the exterior grade to the crown of the pipe.

Sec. 49-519. Workmanship.
Workmanship shall be of such character as fully to secure the results sought to be obtained in all sections of this chapter.

Sec. 49-520. Location of soil, waste, vent or water pipe from electric panels.
No soil, waste, vent or water piping shall be installed in the dedicated or working space for electrical panels.

(a) Dedicated space shall be defined as the space required for the width and depth of the panel and extending from the floor to a height of six (6) feet above the panel.(See figure 520(a)

(b) Working space shall be defined as follows:

(1) The width of the electrical panel or thirty (30) inches whichever is greater;

(2) The height of the electrical panel from the floor to the top of the panel or a minimum of six (6) feet six (6) inches which ever is greater.

(3) A clear space in front of the panel of 4 feet.(See figure 520(b))

Sec. 49-521. Protection of piping passing through studs, plates and joists.
Copper and plastic pipes passing through wood or steel studs, plates or floor joists within 1½ inches of the edge shall be protected from puncture by a minimum 1/16 inch-thick steel plate.

Sec. 49-522. Pipe and valve identification.
(a) Piping and valves installed under Chapter 49 aboveground in all commercial buildings of two stories or more shall be identified in accordance with ANSI A13.11 and requirements of this article.

(b) Systems transporting hazardous materials shall be identified using durable markers stating the type of material in the system in black letters on a yellow background. Valves shall be tagged using the same system identification and colors.

(c) Systems transporting nonhazardous materials shall be identified using durable markers stating the type of material in the system in white letters on a green background. Valves shall be tagged using the same system identification and colors.

(d) In all buildings where there are potable and nonpotable water system each system shall be identified.

(e) Piping labels shall include arrows showing direction of flow.

(f) Valve tags shall state whether valves are "normally open" or "normally closed."

(g) Pipe and valve identification for swimming pools shall comply with section 49-2013.

(h) Grease Lines

(1) Underground grease lines shall be labeled with a 2" wide green polyethylene tape with white lettering that says "sewer line" for the entire length of the pipe including branches. The tape shall be attached to the top of the pipe with plastic ties around the warning tape and the pipe every five feet on center.

(2) Above ground grease lines shall be labeled with 2 inch tall green self-adhesive lettering that says "grease line" at a spacing of no greater than ten feet; or be spray painted green using a stencil with 2 inch white lettering that says "grease line" at a spacing of no greater than ten feet.

Sec. 49-523. Label spacing.
Piping shall be labeled at no more than ten feet on center and at the following locations:

(a) Within 12 inches of each joint or coupling.

(b) Within 12 inches of each 90-degree or greater change in direction.

(c) Within 12 inches of one leg of each tee.

Sec. 49-524. Lettering size.
(a) Lettering size shall be determined by the outside diameter of the pipe for non-insulated systems and by the outside diameter of the insulation for insulated systems.

(b) The minimum lettering height shall be as follows:

Outside Diameter (inches)	Lettering Height (inches)
¾ and less	1
1 to 2½	1½
3 and over	2½

Sec. 49-525. Typical system requirements.
The following table lists typical piping systems and the required label colors:

System Colors	
Chlorine	Black letters on yellow background
Domestic cold water	White letters on green background
Domestic hot water	White letters on green background
Natural gas	Black letters on yellow background
Nonpotable water	Black letters on yellow background
Oxygen	White letters on green background
Recirculating water	White letters on green background
Sanitary sewer	White letters on green background
Sanitary vent	Black letters on yellow background
Storm drain	White letters on green background

In the absence of specific requirements use ANSI Standard A13.1

Sec 49-526. Piping in fire walls and fire partitions.

(a) No waste, vent or water piping shall be installed in a common 2 hour rated fire wall.

(b) All laundry boxes installed in a fire partition shall be a rated.

(c) All penetrations of a fire wall or a fire partition shall conform to chapter 43 of this code.

Sec. 49-527 Chemical and soap dispensing equipment.

Chemical and soap dispensing equipment using water shall be connected to the water supply through a separate and independent connection from a minimum one-half-inch rigid water pipe. The supply shall have an independent stop or valve and be protected by an approved RPZ assembly. No saddle valves shall be allowed. No dispensing equipment shall be connected to a service sink or mop sink faucet or any other faucet or fixture supply.

Sec. 49-528 High Density Polyethylene Plastic Pipe and fittings(HDPE)

High Density Polyethylene Plastic Pipe (HDPE) SDR 17 may be used only when used with the directional boring or pipe bursting method.. See section 49-1732 for other allowed uses of HDPE

Section 49-529---49-594 Reserved

Sec. 49-595 Incorporation of figures by reference.

Figures numbered 507(a)(1), 507(a)(2), 507(b)(1) 1, 507(b)(1)2, 507(b)(1) 3, 507(b)(2), 507(e)(2) 1, 507(e)(2) 2, 507(e)(1), 512(c), 514, 520(a), 520(b), 605(c)(1), 605(c)(2), 605(c)(3), 605(c)(e) 608(a)(2), 608(a)(7), 608(b)(2), 613(c), 614(a)(1), 614(a)(2), 614(a)(3), 614(a)(4), 637(a)(1), 637(a)(2), 637(a)(2), 637(a)(4), 637(a)(5), 637(b)(1), 637(b)(2), 637(b)(3), 637(c)(1), 637(c)(2), 637(c)(3), 637(d)(1), 637(e)(1), 704(i), 910, 910(c), 910(d), 1140, 1142, 1143, 1144, 1145, 1146, 1147, 1149, 1207, 1210(a), 1210(c), 1305(a), 1305(b)(1), 1305(b)(4), 1305(b)(5), 1307, 1309, 1310(b), 1312(c), 1314(a), 1314(b)1, 1314(b)2, 1314(b) 3, 1314(c), 1316-1, 1316-2, 1316-3, 1320(a), 1320(b), 1320(h), 1322, 1400(a), 1400(b), 1405, 1407, 2006(b) 1, 2006(b) 2, 2006(b) 3, 2046(b)(1), 2046(b)(2), 2111, 2115, 2117-1, 2117-2, 2117-3, 2119-1, 2119-2, 2119-3, 2129-1, 2129-2, 2129-3, 2300

are appended hereto and are integral parts of this chapter, and whenever referred to in the text of this chapter by number shall be used in construing and applying the section in which they are incorporated by reference, provided that, if the use of a figure causes a conflict with the text of this chapter, the latter shall control.

Section 49-596---49-599 Reserved.

ARTICLE VI. FIXTURE STANDARDS

Sec. 49-600. Access for the disabled.

Special requirements for the disabled shall be met in accordance with the appropriate city, state, or federal regulations.

Sec. 49-601. Temporary toilet facilities for buildings under construction.

Temporary plumbing facilities shall be provided as follows:

(a) Construction sites: Temporary plumbing facilities shall be provided at all construction sites where plumbing facilities are not made available to the public. This will include, but not be limited to new subdivisions, commercial construction projects and alterations or renovations to exiting structures where construction personnel do not have ready access to plumbing facilities. Minimum temporary plumbing facilities shall be provided by the developer or the project, subdivision or general contractor in accordance with the following:

(1) New Multi-Family Dwelling Projects:

One (1) per thirty (30) employees or sub-contractors, or one per every building, when each building is within 500 feet of the temporary facility.

(2) Commercial, Industrial Projects:
One (1) per thirty (30) employees or sub-contractors, or one (1) per 5000 square feet of construction, but in no case shall there be a distance greater than 500 feet between temporary facility locations, whichever is more restrictive.

(b) Temporary structures. Structures intended for use for less than 6 months shall install temporary toilet facilities in accordance with the following:

(1) Travel distance from the furthest point in the structures to toilet facilities within the building should be 200 feet or less or,

(2) A trailer equipped with toilet facilities is located adjacent to the structures. It must be supplied with potable water and a self-contained holding tank for waste.

(i). Any hose used in connecting the potable water shall be NSF approved for potable water and.

(ii). A RPZ shall be installed on the connection at the building for the water supply to the trailer.

(iii). The pumping of the holding tank shall be sufficient to maintain a sanitary facility.

(3) No toilet facilities using only a holding tank shall be used.

Sec. 49-602. Water supply protection.
Supply lines or fittings for every plumbing fixture shall be installed so as to prevent backflow and cross-connection.

Sec. 49-603. Overflows.
When any fixture is provided with an overflow the waste shall be arranged so that the standing water in the fixture cannot rise in the overflow when the stopper is closed or remain in the overflow when the fixture is empty.

Sec. 49-604. Access to concealed connections and equipment.
(a) Fixtures with concealed slip joint connections shall be provided with an access panel or utility space to make the slip connection accessible for inspection and repair.

(b) Where such access cannot be provided, all joints shall be soldered, solvent cemented, or threaded so as to form a solid connection.

(c) Hydromassage units shall have an access large enough to remove and repair motors and pumps. In no case shall the access be less than 14 inches by 14 inches and the access shall not be more than 12 inches from the equipment to be serviced.

Sec. 49-605. Automatic clothes washers.
(a) Automatic clothes washers shall conform to ASSE 1007.

(b) Residential clothes washers shall be piped independently to a three-inch or larger soil or waste pipe and when connected to a horizontal soil or waste line shall be five (5) feet away at point of connection from any water closet opening.

(c) Commercial clothes washers using a pump to discharge the waste shall be piped as shown in figures 605(c)(1) and 605(c)(2). Clothes washers that discharge the waste by gravity may be piped as shown in figure 605(c)(3).

(d) Commercial clothes washers shall comply with section 49-904, 49-908 and 49-909.

(e) The trap for the standpipe for clothes washers not gravity discharged shall have a minimum six (6) inches and a maximum eighteen (18) inches rough in above the floor. The standpipes for any clothes washer shall be a minimum twenty-four (24) inches and a maximum thirty-six (36) inches above the trap. See figure 605(e)

(f) A clothes washer may be connected to an existing two-inch waste on remodels if approved by the chief plumbing inspector.

Sec. 49-606. Bathtubs.

(a) Bathtubs shall conform to ASME/ANSI A112.19.1, ANSI Z124.1 or ASME/ANSI A112.19.4.

(b) Bathtubs shall have a waste and overflow a minimum of 1½ inches in diameter, and shall be equipped with an approved stopper or pop-up.

(c) Whirlpool bathtubs shall comply with ASME/ANSI A112.19.7.

(1) The pump shall be accessible and located above the weir of the fixture trap.

(2) Suction fittings shall comply with ASME/ANSI A112.19.8.

(3) Pump drains shall be sloped to drain the water in the volute when the whirlpool bathtub is empty.

(d) Pedicure Foot bath shall comply with ASME/ANSI A112.19.7.

(1) The water supplies shall be protected by an approved air gap or a RPZ.

(2) The waste shall be directly connected to a P-trap located below the fixture.

(3) If the fixture uses a pump to discharge the waste then it shall run horizontally and connected directly to a P-trap. The discharge hose from the pump shall be run as to allow all waste water to drain from the hose.

(4) Operating water temperature shall not exceed 100 degrees F.

(5) Water in the foot bath shall not be recirculated or reused. All water shall be drained from the fixture after each use and the fixture sanitized.

(6) The supply faucet or device shall meet ASTM A112.18.1 and any hoses shall meet ASSE 1025.

(7) All water connections shall have a 400 lb. ball valve on both hot and cold water supplies and be readily accessible.

(8) Any water hoses used to connect the unit shall meet NSF 61. Waste discharge from pumps, or supply hoses shall not be run in such a manner that they present a safety hazard.

(9) No other gravity waste shall be connected within three (3) feet of the trap.

(10) Units with five (5) gallon capacity or less will be rated 2 waste fixture units and 2 water fixture units.

See section 49-637 for spacing requirements.

Sec. 49-607. Bidets.

(a) Bidets shall conform to ASME/ANSI A112.19.2.

(b) Bidets shall have a minimum waste outlet and trap of 1½ inches.

(c) Bidets shall be protected against backflow.

Sec. 49-608. Dishwashing machines.

(a) Residential dishwashing machines:

(1) Residential dishwashing machines shall conform to ASSE 1006.

(2) The discharge piping shall have hangers as shown in figure 608(a)(2)

(3) The water supply shall be protected against backflow and shall be independently valved.

(4) The maximum distance for the waste shall be 20 feet developed length or as recommended by the manufacturer.

(5) If the discharge is concealed, it shall be piped in type L soft copper, type M hard copper or other approved material.

(6) Residential dishwashing machines are not added to the fixture unit load when discharging through a sink or disposal.

(7) When a dishwasher waste is installed below the finished floor, the waste from the connection at the pump to the connection at the sink shall be type L soft or type M hard copper. (See figure 608(a)(7))

(8) Hose supplied by the manufacturer may be used from the machine pump to the sink connection when installed according to figure 608(a)(2).

(9) Reinforced rubber hose may be used when the hose is of one continuous length from the dishwasher pump to the sink connection.

(b) Commercial dishwashing machines:

(1) Shall conform to ASSE 1004.

(2) Shall be piped as an indirect waste see section 49-1004. (See figure 508(b)(2))

(3) Shall be protected against backflow.

(4) Shall be supplied with a minimum of 155 degrees Fahrenheit hot water as measured at the connection of the dishwasher. A booster heater installed at the dishwasher may be used to maintain this temperature.

Sec. 49-609. Drinking fountains and water coolers.

Drinking fountains and water coolers:

(a) Shall conform to ARI 1010 or ASME/ANSI A112.19.2 and NSF 61.

(b) Shall not be installed in public restrooms.

(c) Shall be an independent fixture.

Sec. 49-610. Emergency showers and eyewash stations.

Shall be installed in accordance with ANSI Z358.1

Sec. 49-611. Floor drains.

(a) Floor drains shall conform to ASME/ANSI A112.21.1M and CISPI C74-837 and shall not have an integral cleanout.

(b) Floor drains shall have removable strainers with a minimum width of five inches. The area of the openings in the strainer shall be equal to the area of the waste pipe serving the drain..

(c) The trap of all floor drains shall be constructed so that the drain can be cleaned.

(d) Floor drains shall have a minimum waste of two inches in diameter.

(e) All floor drains installed in floors above the basement floor shall be provided with a pan which shall extend a minimum of one (1) foot from the outer edge and weep holes into the waste line of the strainer side of trap. Exception: Drains in single-family dwellings shall not require a pan.

(f) Drains to meet special needs may be approved as to type by the plumbing board.

Sec. 49-612. Trench drains.

Trench drains shall be provided with a cover designed to withstand traffic loads. Trench drains shall have a minimum waste of two (2) inches in diameter for drains two (2) feet long or less. A minimum waste of three (3) inches in diameter for drains two (2) feet to ten (10) feet long. A minimum waste of four (4) inches in diameter for drains more than ten feet.. When trench drains are used in a garage see section 49-614.

(a) Trench Drains Standard

(1) Trench drains general use shall conform to ANSI A112.21.1M-1991.

(2) Trench drains shall be at least four inches wide at the throat of the trench, and a minimum of four (4) inches deep at the shallowest point. Bottom of the trench drain shall slope a minimum 1/8 inch per foot to the waste connection. Sections seams shall be bolted flanged connection with gasket.

(3) All trench drains shall be incased in a minimum thickness of four (4) inches of concrete.

(b) Trench Drains Stainless Steel.

(1) Stainless Steel Trench drains shall conform to ANSI A112.21.1M-1991.

(2) Trench drains shall be at least six (6) inches wide at the throat of the trench, and a minimum of six (6) inches deep at the shallowest point. Bottom of the trench drain shall slope a minimum 1/8 inch per foot to the waste connection. Sections seams shall be bolted flanged connection with gasket.

(3) Trench drains used within food processing, hospitals, slaughter houses, dairies, and breweries shall be all stainless steel construction of #14 gauge type 304 SS. Section seams bolted flanges and then welded inside, grounded to a smooth finish.

(4) Trench drains used in corrosive conditions chemical industries, pharmaceutical plants, and acid waste systems shall be all stainless steel construction of #14 gauge, Type 316 SS. Section seams shall be welded, and ground smooth.

(5) All trench drains shall be incased in a minimum thickness of four (4) inches of concrete.

(c) Trench drains poured in place.

(1) Trench drains shall be at least four inches wide at the throat of the trench, and a minimum of four (4) inches deep at the shallowest point. Bottom of the trench drain shall slope a minimum 1/8 inch per

foot to the waste connection.

(2) The walls and floor of the drain shall be a minimum thickness of four (4) inches of concrete.

(3) There shall be a ¾ inch wide metal frame poured in place to support the cover

Sec. 49-613. Floor sinks.

(a) Floor sinks shall be enameled cast-iron.

(b) Floor sinks shall be a minimum of six (6) inches deep measured from the finished floor to the inlet strainer.

(c) Floor sinks may be set above the finished floor when installed in the base of a cabinet and sealed to the cabinet base. See figure 613(c)

(d) Floor sinks shall have a minimum waste of two inches in diameter.

(e) No floor sinks shall be installed in any walkway. Exception: Floor sinks with secured, flat strainers at finished floor level may be used if equipment prevents access.

Sec. 49-614. Garage drains.

Garage drains shall be installed as follows:

(a) Private residential garages of three cars or less:

(1) Shall be a minimum size of three (3) inches.

(2) Shall be a bucket type garage drain, or a trench drain with a gravel stop.

(3) Shall be installed to conform to figures 614(a)(1), 614(a)(2), 614(a)(3) and 614(a)(4).

(b) Commercial garage drains:

(1) Shall be a minimum size of four (4) inches.

(2) Shall be a bucket type garage drain or trench drain with a gravel stop.

(3) Shall be installed to conform to figure 1140

(4) Shall drain to a type I interceptor.

Sec. 49-615. Food waste grinders (garbage disposal).

(a) Residential food waste grinders:

(1) Residential food waste grinders shall conform to ASSE 1008 and UL 430.

(2) Residential food waste grinders shall be connected to a drain of not less than 1½ inches in diameter.

(3) Residential food waste grinders are not added to the fixture unit load when installed on a residential kitchen sink.

(4) Residential food waste grinders shall not be connected to an anti-siphon trap.

(b) Commercial food waste grinders (garbage disposal) shall not be permitted in commercial kitchens.

Sec. 49-616. Garbage can washers.

(a) Garbage can washers shall be separately trapped.

(b) The receptacle receiving the waste shall have a removable basket or strainer to prevent the discharge of large particles into the waste system.

(c) The water supply shall be protected against backflow.

Sec. 49-617. Laundry sinks.

(a) Laundry sinks shall conform to ASME/ANSI A112.19.1 or ASME/ANSI A112.19.3 or ANSI Z124.6.

(b) Each compartment shall be provided with a waste outlet of a minimum of 1½ inches.

(c) Laundry sinks shall be provided with a strainer or crossbar to restrict the clear opening of the waste outlet.

Sec. 49-618. Lavatories.

(a) Lavatories shall conform to ASME/ANSI A112.19.1, ASME/ANSI A112.19.2, ASME/ANSI A112.19.3 or ASMI/ANSI A112.19.4.

(b) An overflow is not required.

(c) Vanity tops with an integral lavatory shall conform to ANSI Z124.3.

(d) Lavatories shall have a minimum waste of 1¼ inches.

(e) Lavatories shall have a strainer, pop-up stopper, crossbars or other device to restrict the clear opening of the waste outlet.

(f) Every twenty (20) inches of rim space for a large basin accommodating more than one person shall be considered as one lavatory.

See section 49-637 for spacing requirements.

Sec. 49-619. Mop sinks.

(a) Mop sinks shall have a minimum outlet of two (2) inches.

(b) Mop sinks shall have a minimum depth of ten (10) inches.

(c) Mop sinks shall have a minimum combined area of four (4) square feet.

(d) The faucet shall be a minimum of twenty-four (24) inches above the finished floor and have an integral vacuum breaker.

Sec. 49-620. Showers.

(a) Showers shall have a waste outlet of not less than two inches.

(b) All shower compartment shall measure a minimum thirty (30) inches by thirty (30) as measured from the finished interior of the compartment.

(c) Showers shall have a removable strainer not less than three inches in diameter with strainer openings not less than one-fourth inch minimum dimension.

(d) Showers shall run directly to a three-inch (3) or larger waste, independent of other fixtures.

(e) All shower drains, except those provided with a receptor, shall be equipped with a shower pan made from four-pound lead or nonplasticized chlorinated polyethylene, nominal 0.040 inch thick, solvent weldable with xylene; or, alternatively, a shower pan made with polyvinyl chloride (PVC) containing a plasticizer nominal 0.040 inch thick which meets ASTM Standard D-4551-86, with all joints to be as recommended by the manufacturer.

(f) An upturn of one of the three above-mentioned shower pan materials shall extend at least six (6) inches above the finished floor and connected by a clamping ring of a shower drain.

(g) The top edge of all corner folds in lead pans must be soldered. All corner folds of the other types of membranes must be solvent welded.

(h) Plastic shower bases and shower stalls shall conform to ANSI 112.2 or ANSI Z124.2.

(i) A shower room (gang showers) having multi-shower valve and heads shall be serviced by a minimum three (3) inch drain for each 10 valve or heads. Shower rooms having more than two shower stalls shall provide a two (2) inch floor drain in the area of the stalls.

(j) The floor in rooms having multiple showers shall be slope towards the drain in such a manner that water from one shower will not flows through another shower area.

See section 49-637 for spacing requirements.

Sec. 49-621. Residential sinks.

(a) Residential sinks shall conform to ASME/ANSI A112.19.1, ASME/ANSI A112.19.2 or ASME/ANSI A112.19.3 or ANSI Z124.6.

(b) Residential sinks shall have a minimum waste of 1½ inches.

(c) When two or more sink compartments are joined, there shall be a diverter tee installed.

Sec. 49-622. Service sinks.

(a) Service sinks shall conform to ANSI 112.19.2.

(b) Service sinks shall have a minimum of a two (2) inch waste.

(c) The faucet shall have an integral vacuum breaker.

Sec. 49-623. Urinals.

(a) The siphon jet, blowout, washout and pedestal shall be integral flushing rims and integral traps except on floor-set urinals.

(b) Urinals shall conform to ASME/ANSI A112.19.1, ASME/ANSI A112.19.2, ASME/ANSI A112.19.3 or ASME/ANSI A112.19.4.

(c) Urinals shall use a maximum of 1.0 gallons of water per flushing cycle.

(d) A separate flushing device shall be installed for each urinal.

(e) New urinals shall have a minimum of a 2-inch waste. The replacement of existing urinals with a 1½-inch waste will be permitted.

See section 49-637 for spacing requirements.

Sec. 49-624. Water closets.

(a) Water closets shall conform to ASME/ANSI A112.19.2 or ANSI Z124.4.

(b) Water closets for public or employee use shall be equipped with elongated bowls.

(c) The seats of water closets provided for public or employee use shall be hinged with open-front less cover.

(d) Where a three (3) inch closet bend is used, a four (4) inch by three (3) inch flange shall be used to receive the fixture horn.

(e) Each water closet shall be equipped with a separate flushing device.

(f) Closet flanges shall be securely anchored to the floor with bolts or screws. Exception: When a closet bend passes through a slab on grade concrete floor and made with a lead and oakum joint.

(g) Water closets shall be connected to a closet flange or in the case of a wall hung water closet to a closet carrier meeting ASME /ASTM A112.6.1.

(h) No water closet shall be installed in a room without a lavatory. Exception:
   (1) Toilet room(s) used to obtain medical specimens.
   (2) Room(s) used for drug screening.
   (3) Restrooms used by students in schools, preschools and nurseries.

See section 49-637 for spacing requirements.

Sec. 49-625. Flushing devices for water closets and urinals.

Each water closet, urinal, clinical sink or other plumbing fixture which depends on trap siphonage to discharge its contents to a waste or soil pipe shall be provided with a flushometer valve or flush tank designed and installed so as to supply water in quantity and rate of flow to flush the contents of the fixture, cleanse the fixture and refill the fixture trap.

(a) Flushometer valves:

   (1) Must be readily accessible for repairs.

   (2) Shall have a means for regulating the flow through the valve.

   (3) Shall be provided with a backflow preventer.

   (4) Shall complete the cycle of operation automatically.

   (5) Shall conform to ASSE 1037 and ASSE 1001.

(b) Flush tanks:

   (1) When equipped for manual flushing, shall be controlled by a device designed to refill the tank after each discharge and to completely shut off the water flow to the tank when filled to operational capacity.

   (2) The trap seal to the fixture shall be automatically refilled after each flushing.

   (3) All ball cocks shall be anti-siphon conforming to ASSE 1002.

   (4) Flushometer tanks shall comply with ASSE 1037.

Sec. 49-626. Special plumbing fixtures.
If a plumbing fixture is to be installed and used solely for a religious rite that does not allow for that fixture's discharge to be combined with sewage, plans for an alternate method of disposal may be submitted to the Chief Plumbing Inspector for approval.

Sec. 49-627. Faucets and fittings.
(a) Faucets shall conform to ASME/ANSI A112.18.1.

(b) Hose sprays for sink faucets shall conform to ASSE 1025.

(c) Hand showers shall conform to ASSE 1014.

(d) Hot water shall be connected to the left-hand side of the fixture fitting.

(e) Shower valves shall be balanced pressure-mixing valves or anti-scald thermostat-mixing valves conforming to ASSE 1016. The temperature control valves shall be equipped with high-limit stops.

(f) All bathtubs and showers installed in buildings which contain more than one dwelling unit or guest room, or nursing facilities or other care facilities shall be equipped with either a pressure balancing or thermostatic-mixing scald prevention device which is designed and installed to prevent (a) sudden unanticipated changes in the temperature of the water delivered and (b) the temperature of the water delivered from exceeding 110 degrees Fahrenheit. The water heater thermostat shall not be used as the temperature-control for compliance with this section.

Sec. 49-628. Ventilation of rooms containing plumbing fixtures.
Rooms containing plumbing fixtures shall be ventilated in accordance with Chapter 43 of this Code.

Sec. 49-629. Establishments where food or drink is manufactured, sold or distributed.
All places where food or drink is manufactured, sold or distributed shall install and maintain plumbing to meet the following special requirements in addition to the regular provisions of this chapter:

(a) Elongated closet bowls with open front less cover seats shall be installed in both public and employee toilet rooms.

(b) Urinals shall be siphon jet or blowout with integral flushing rims and integral traps.

(c) Floor and wall construction must comply with that prescribed by Chapter 43 for public toilet rooms.

(d) Toilet rooms must be provided with an approved floor drain set so that the floor can be laid with at least one-eighth inch fall per foot to the drain.

(e) Fixtures in areas where food or drink is prepared or manufactured shall be piped with an indirect waste to a floor sink as the receiving fixture. Exception: Hand sinks (lavatories) and food waste grinders shall be directly connected.

(f) A minimum of one three-compartment sink with a minimum of one drain board shall be installed.

(g) One mop sink, service sink or curbed cleaning facility equipped with a floor drain shall be provide and conveniently located for the cleaning of mops or similar wet floor cleaning tools and to provided for the disposal of wastewater from cleaning.

(h) Handwashing facilities shall be installed and used as follows:

(1) A handwashing facility shall be located in the same room for the convenient use by employees in food

or drink preparation areas, food or drink dispensing areas, and warewashing areas.

(2) A handwashing facility shall be within twenty (20) feet of any food or drink preparation areas, food or drink dispensing areas, and warewashing areas.

(3) A handwashing facility shall be equipped with either a single lever faucet, foot or knee controls, a sensor faucet or wing blade handles that can be turned off with the wrists.

(4) A handwashing facility may not be used for purposes other than handwashing.

(5) A handwashing facility shall be maintained so that it is accessible at all times for employee use.

Sec. 49-630. Toilet rooms for two sexes.
Where two sexes are employed or accommodated, separate toilet rooms shall be provided. Such toilet rooms shall be completely enclosed, and so arranged to ensure privacy. Toilet rooms may be kept locked if several occupants or employees on the premises possess keys and have access thereto.

(a) Each toilet room shall be distinctly marked with regard to the sex which uses it.

(b) No person shall be allowed to use a toilet room assigned to the other sex.

(c) The door or room labels shall be the words "Men's" or "Gentlemen," or "Women's" or "Ladies," respectively, in letters not less than two inches in height, or other international symbols. (Exception: As noted in 49-631 (c) & (d) handicapped accessible toilet rooms shall be so labeled).

Sec. 49-631. Unisex toilet rooms.
(a) Unisex restrooms shall not be installed in the following facilities:

(1) Swimming pools

(2) Schools (Exception: As noted in (f))

(3) Malls (Exception: As noted in (d))

(4) Where food or drinks are prepared or served except in a business where the customer is served food and/or drink only from a drive up window and there are four or fewer employees and the gross area of the building is 600 square feet or less.

(b) A single unisex toilet room may be used where at least one of the following applies:

(1) The gross area of the space occupied by a business where four or fewer employees are normally stationed is 1,500 square feet or less.

(2) Where the toilet room fixture requirements for occupancy of the business are met, but the existing toilet rooms cannot be enlarged to meet requirements for the physically handicapped, a single accessible unisex toilet room may be installed.

(3) Where the toilet room fixture requirements for the occupancy are met, an additional unisex restroom or multiple unisex restrooms may be installed for the convenience of the occupants.

(c) General requirements for unisex restrooms:

(1) The toilet room shall have a lockable door and a sign indicating whether the room is occupied or unoccupied.

(2) The toilet room shall meet all other requirements for use by the handicapped.

(3) The door or room label shall be the words "Unisex Restroom" in letters not less than two inches in height, or it shall be labeled with other international symbols. In no case shall a toilet room labeled "Men" or "Women" serve as a unisex toilet room.

(4) The minimum fixture requirement for unisex restrooms shall be one water closet, one lavatory, and one urinal. (Exception: As noted in (e) & (f))

(d) Family use restrooms.

(1) Optional: Buildings in which all handicapped and non-handicapped fixture requirements for occupancy have been satisfied, optional additional unisex restroom(s) for family use may be installed.

(2) Required: In occupancies of assembly and mercantile where all handicapped and non-handicapped fixture requirements for occupancy have been satisfied and where a total of eight (8) or more water closets and urinals are required for occupancy, there shall be an additional separate restroom for family use. For each additional twenty (20) required water closets and urinals thereafter, one additional family use restroom shall be provided.

(3) In new buildings requiring installation of family use restroom(s), said restroom shall be located adjacent to the restrooms required for occupancy and the necessary floor to floor travel to the required family use restroom(s) shall not exceed one floor, up or down.

(4) In recreational facilities containing a shower or showers that are not located in single use bathing rooms, there shall be a separate bathing room for "Family Use Only".

(5) Family use restrooms shall meet all handicap accessibility requirements and shall meet all of the requirements set forth in Sec. 49-631(c) above, except that the door or room label shall bear be the words "Family Use Restroom" in letters not less than two inches in height, or it shall be labeled with other international symbols.

(e) Medical office facilities:

(1) In medical offices in which all handicapped and non-handicapped fixture requirements for occupancy have been met, an additional restroom, may be installed to obtain medical specimens. The fixtures shall not be included when determining the fixture requirements for the occupancy.

(2) Where a toilet room in a medical facility is used specifically for drug screening, the room may contain only a water closet. Installation of a lavatory and urinal will not be required.

(f) Schools, preschool and nursery

(1) For preschool and nursery children five (5) years old or under, a unisex restroom may be used. A unisex restroom for preschool or nursery children is not required to contain a urinal.

(2) For schools, a unisex restroom may be used in the nurse's office. The fixtures shall not be included in determining the fixture requirements for the occupancy.

Sec. 49-632. Reserved

Sec. 49-633. Minimum facilities for dwelling units, townhouses or apartments.

(a) Dwelling units or townhouses shall be equipped with the following: one water closet, one lavatories, one bathtub or shower, one kitchen sink, one two-inch clothes washer connection, one water heater, and one two-

inch floor drain.

(b) Apartment units shall be equipped with the following: one water closet, one lavatory, one bathtub or shower, one kitchen sink, and one two-inch clothes washer connection. Exception: If a multi-family building has a central laundry facility on-site, the requirements for a clothes washer connection in each apartment may be deleted. The minimum requirement shall be one washer for each ten units or fraction thereof.

(c) Fixtures shall be properly trapped and vented and provided with hot and cold water.

Sec. 49-634. Minimum facilities for occupied nonresidential buildings.

(a) Occupied nonresidential buildings shall be equipped with plumbing fixtures of the number and type listed in section 49-636.

(b) Rooms containing plumbing fixtures shall be constructed in accordance with Chapter 43 of this Code.

(c) Fixtures shall be properly trapped and vented and provided with hot and cold water or tempered water. The temperature of the hot water to any fixture where the public shall have access shall not exceed 120 degrees F. The water heater thermostat shall not be used to control the temperature for this provision.

(d) Restrooms shall have access from within the facilities or from a common hall or passageway and shall not have a travel distance exceeding 200 feet. Employees and customers shall not be required to exit and then to reenter the building to use the restroom.

(e) All plumbing fixtures shall be properly installed and in working order and maintained free of leaks and defects.

(f) All bathrooms and restrooms shall be maintained in a safe and sanitary condition with soap and towels or hand dryers for hand washing and toilet paper. In unisex or women's restrooms shall provide proper containers for the disposal of sanitary products.

(g) Toilet paper dispensers shall be 7 inches minimum and 9 inches maximum in front of the water closet measured to the centerline of the dispenser and shall be 15 inches minimum and 48 inches maximum above the floor. The dispensers shall not be of a type that control delivery or does not allow continuous paper flow.

(h) Hand operated metering faucets shall remain open for 10 seconds minimum.

Sec. 49-635. Right of use of toilet rooms in businesses by customers.

Any business which invites the public to shop or purchase, or that provides services, shall provide toilet rooms for both sexes as set forth in section 49-636. The business shall make the toilet rooms available to their customers. The toilet rooms shall be located so the public is not required to pass through kitchens, storage areas or warehouse space or any space where safety is a concern. Toilet rooms may be kept locked if several occupants or employees on the premises possess keys and have access thereto.

Sec. 49-636. Fixture requirement tables.

Occupancy shall be determined by chapter 43 of the Omaha Municipal Code unless specified in the notes listed following each table. Once the occupancy has been determined that occupancy number shall be divide by two, and that quotient shall be applied to the tables below; provided that drinking fountains shall be based on the total occupancy. Ratios other than 1:1, men to women, shall be submitted to the plumbing board for approval. When the minimum requirement for males of 1 WC and 1 UR are met the ratio may be 2 UR for each WC thereafter.

Table 1. Assembly of more than One Thousand (1000)

Churches (sanctuary), auditoriums, theaters (movies/screen), and stadiums:
Where alcohol is served.

WC/UR - Male	WC - Female	Lav - Male	Lav - Female	DF
1 per 80	1 per 60	1 per 160	1 per 120	See Note 4

Where no alcohol is served

WC/UR - Male	WC - Female	Lav - Male	Lav - Female	DF
1 per 125	1 per 100	1 per 250	1 per 200	See Note 4

Note 1: The minimum requirement for males is 1 WC and 1 UR. Thereafter, the ratio will be 2 UR for each WC.

Note 2: For churches with hall/auditoriums in the same building, base fixture requirements on occupant load for the hall/auditorium only.

Note 3: The occupant load factor without fixed seating is seven (7) square feet per person.
The occupant load factor with fixed seating is fifteen (15) square feet per person.
When individual seats are permanently anchored to the structure, the occupant load factor will be based on the count of seats. Where bench or pew seating is provided (i.e. stadiums and churches) 18 inches of linear bench or pew will count as one seat.

Note 4: Provide 7 DF plus 1 for each additional 300 or fraction thereof .

Note 5: Other fixtures will be required when food or drink is served, see section 49-629.

Note 6: Fixtures accessible only to private offices shall not be counted to determine compliance with this section.

Table 2. Assembly of One Thousand (1000) or less.
Churches (sanctuary), auditoriums, theaters (movies/screen), stadiums and halls:

Number	WC Male	UR Male	Lav Male	WC Female	Lav Female	DF
1 - 25	1	0	1	1	1	0
26 - 50	1	0	1	2	1	1
51 - 75	1	1	1	3	2	1
76 - 100	1	1	1	4	2	1
101 - 200	2	1	2	5	3	2
201 - 300	2	2	2	6	3	3

Add one water closet or one urinal for each additional 200 males or fraction thereof. Urinals may be substituted for water closets provided the number of urinals shall not be more than twice the number of water closets.
Add one lavatory for each additional 400 males or fraction thereof.
Add one water closet for each additional 150 females or fraction thereof.
Add one lavatory for each additional 300 females or fraction thereof.

Note 1: The occupant load factor without fixed seating is seven (7) square feet per person.
The occupant load factor with fixed seating is fifteen (15) square feet per person.
When individual seats are permanently anchored to the structure, the occupant load factor will be based on the count of seats. Where bench or pew seating is provided (i.e. stadiums and churches) 18 inches of linear bench or pew will count as one seat.

Note 2: Provide 1 additional DF for each 150 persons or fraction thereof.

Note 3: Other fixtures will be required when food or drink is served, see section 49-629.

Note 4: For churches with hall/auditoriums in the same building, base fixture requirements on occupant load for the hall/auditorium only.

Table 3. Restaurants

Number	WC Male	UR Male	Lav Male	WC Female	Lav Female	DF
1 - 25	1	0	1	1	1	0
26 - 50	1	0	1	2	1	1
51 - 75	1	1	1	3	2	1
76 - 100	1	1	1	4	2	1
101 - 200	2	1	2	5	3	2
201 - 300	2	2	2	6	3	3

Add one water closet or one urinal for each additional 200 males or fraction thereof. Urinals may be substituted for water closets provided the number of urinals shall not be more than twice the number of water closets.
Add one lavatory for each additional 400 males or fraction thereof.
Add one water closet for each additional 100 females or fraction thereof.
Add one lavatory for each additional 200 females or fraction thereof.

Note 1: A water station may be substituted for a drinking fountain.

Note 2: Any restaurant that serves alcoholic beverages or liquor for consumption on premises as part of the meal served, shall be considered as a restaurant that does not serve alcoholic beverages.

Note 3: Occupant load shall be based on 15 square feet per person after deducting areas such as stairwells, restrooms, entries, elevators, dance floors, kitchen, bar areas, and utility rooms. Employees are factored in the 15 square feet occupant load.

Note 4: Other fixtures will be required when food or drink is served, see section 49-629.

Note 5: Fixtures accessible only to private offices shall not be counted to determine compliance with this section.

Note 6: Where only one water closet and one lavatory is required, the restroom shall have a lockable door. See section 49-631.

Note 7: Restaurants with inside and outside seating will not be required to have additional toilet facilities for the outside seating if the outside seating does not exceed 25 percent of the interior seating. However, if the outside seating exceeds 25 percent of the inside seating, the excess seating shall be added to the inside seating for the purpose of establishing total occupancy and toilet facility requirements for the business.

Note 8: Establishments with only outside seating shall meet all requirements for toilet facilities

Note 9: Restaurants are required to have restrooms located in the space occupied. Food courts shall have restrooms located adjacent to the main dining area.

Table 4. Establishments serving liquor, and malls

Number	WC Male	UR Male	Lav Male	WC Female	Lav Female	DF
1 -25	1	0	1	1	1	0
26 - 50	1	1	1	2	1	1
51 - 75	1	1	1	3	2	1
76 - 100	1	1	1	4	2	1
101 - 150	2	1	2	5	3	2
151 - 200	2	1	2	6	3	2
201 - 250	2	2	2	7	4	2
251 - 300	2	2	3	8	4	3

Add one water closet or one urinal for each additional 100 males or fraction thereof. Urinals may be substituted for water closets provided the number of urinals shall not be more than twice the number of water closets.

Add one lavatory for each additional 200 males or fraction thereof.
Add one water closet for each additional 60 females or fraction thereof.
Add one lavatory for each additional 120 females or fraction thereof.

Note 1: Other fixtures will be required when food or drink is served, see section 49-629.

Note 2: Occupant load shall be based on 15 square feet per person after deducting areas such as stairwells, restrooms, entries, elevators, dance floors, kitchen, bar areas, and utility rooms.

Note 3: Provide 1 additional DF for each 150 persons for 101 to 1000. Provide 7 plus 1 for each additional 300 for 1000 and larger.

Note 4: Fixtures accessible only to private offices shall not be counted to determine compliance with this section.

Note 5: Where only one water closet and one lavatory is required, the restroom shall be required to have a lockable door.

Note 6: For other requirements see section 49-629.

Note 7: Establishments serving liquor with inside and outside seating will not be required to have additional toilet facilities for the outside seating if the outside seating does not exceed 25 percent of the interior seating. However, if the outside seating exceeds 25 percent of the inside seating, the excess seating shall be added to the inside seating for the purpose of establishing total occupancy and toilet facility requirements for the business.

Note 8: Establishments with only outside seating shall meet all requirements for toilet facilities.

Note 9: Establishments serving liquor are required to have restroom located in the space occupied.

Table 5. Industrial/Manufacturing, warehouses, office buildings, medical office, recreational, health spas, country clubs, hospital employee areas.

Number	WC - Male	UR - Male	Lav Male	WC Female	Lav - Female	DF
1 - 5	1	0	1	1	1	0
5 - 10	1	0	1	2	1	0
11- 25	1	1	1	3	2	0
26 - 50	1	1	1	4	2	1
51 - 75	2	2	2	5	3	1
76 - 100	3	2	3	6	3	1
101 - 150	4	3	4	7	4	2
151 - 200	5	3	4	8	4	2
201 - 250	6	4	5	9	5	2
251 - 300	7	4	6	10	5	3

Type of Business	Occupant Load Factor SF/Person	Multiply By
Industrial/Manufacturing	200	0.30
Warehouses	500	0.30
Office Buildings	160	1.00
Telemarketing and Similar Uses	100	1.00
Exercising Rooms	50	0.50
Hospital Employee Areas	15	1.00
Medical Office	240	1.00

Add one water closet or one urinal for each additional 50 males or fraction thereof. Urinals may be substituted for water closets provided the number of urinals shall not be more than twice the number of water closets.
Add one lavatory for each additional 100 males or fraction thereof.

Add one water closet for each additional 50 females or fraction thereof.

Add one lavatory for each additional 100 females or fraction thereof.

Note 1: Provide 1 additional DF for each 150 persons for 101 to 1000. Provide 7 plus 1 for each additional 300 for 1000 and larger.

Note 2: Fixtures accessible only to private offices shall not be counted to determine compliance with this section.

Note 3: In buildings constructed of multiple floors, the fixture count shall be based on the number of occupants of each floor and accessibility to the fixtures shall be on each floor.

Note 4: Where only one water closet and one lavatory is required, the restroom shall be required to have a lockable door.

Table 6. Retail

Number	WC Male	UR Male	Lav Male	WC Female	Lav Female	DF
1 - 25	1	0	1	1	1	0
26 - 50	1	0	1	1	1	1
51 - 100	1	1	1	2	1	1
101 - 200	2	1	2	3	2	2
201 - 400	2	2	2	4	2	3
401 - 600	2	3	3	5	3	4

Add one water closet or one urinal for each additional 200 males or fraction thereof. Urinals may be substituted for water closets provided the number of urinals shall not be more than twice the number of water closets.

Add one lavatory for each additional 400 males or fraction thereof.

Add one water closet for each additional 200 females or fraction thereof.

Add one lavatory for each additional 400 females or fraction thereof.

Note 1: The occupancy load factor is 30 SF/person multiply by 0.40. Ratios other than 1:1, men to women, shall be submitted to the plumbing board for approval.

Note 2: Provide 1 additional DF for each 150 persons for 101 to 1000. Provide 7 plus 1 for each additional 300 for 1000 and larger.

Note 3: In stores of 1,500 square feet or less, located in shopping centers or malls, the requirements of this section may be satisfied by a centrally located facility accessible to several stores, provided that the centrally located facility is adequately sized and not more than 200 feet from the entry of any store.

Note 4: In buildings constructed of multiple floors, the fixture count shall be based on the number of occupants of each floor and accessibility to the fixtures shall be on each floor.

Note 5: Fixtures accessible only to private offices shall not be counted to determine compliance with this section.

Note 6: Where only one water closet and one lavatory is required, the restroom shall be required to have a lockable door. See section 49-631.

Table 7. Swimming pools – public

Number	WC Male	UR Male	Lav Male	Showers Male	WC Female	Lav Female	Showers Female	DF
1 - 25	1	0	1	1	1	1	1	0
26 - 50	1	1	1	2	2	1	2	1
51 - 75	2	1	1	3	3	2	3	1
76 - 100	2	1	2	4	4	2	4	1
101 - 200	3	1	2	5	5	3	5	2
201 - 300	3	2	3	6	6	3	6	3

Add one water closet or one urinal for each additional 150 males or fraction thereof. Urinals may be substituted for water closets provided the number of urinals shall not be more than twice the number of water closets.
Add one lavatory for each additional 300 males or fraction thereof.
Add one water closet for each additional 150 females or fraction thereof.
Add one lavatory for each additional 300 females or fraction thereof.
Add one DF for each additional 300 occupants or fraction thereof.

Note 1: Occupant load for outside swimming pools will be based on fifteen (15) square feet per person of pool area.

Note 2: Indoor pools in hotels and motels shall have a minimum of one water closet and one lavatory for males and one water closet and one lavatory for females located adjacent to the pool.

Note 3: See section 49-631(d) for family use restroom requirements.

Table 8. Schools

Per Floor	WC	Lav	DF	MS
Preschool/Nursery	1 per 15	1 per 15	1 per 30	1
Elementary	1 per 25	1 per 50	1 per 75	1
Secondary	1 per 30	1 per 60	1 per 75	1
College/University	1 per 35	1 per 70	1 per 75	1

Note 1: Preschool/nursery may be required to meet other standards set by the health department.

Note 2: For children under the age of six, a unisex restroom may be used. For children over the age of five, separate accommodations shall be provided.

Note 3: Facilities for school staff shall be separate and in addition to those for the students using Table 5.

Note 4: Occupant load for classrooms will be based on thirty-five (35) square feet per person.

Note 5: Fixture requirements for locker rooms will be figured using paragraph 5. Occupancy for locker rooms will be based on 50 SF/person.

Note 6: Restrooms for the general school population may be used to accommodate the requirement for auditoriums, gyms and swimming pools and for public events provided there is easy access to the restrooms for those attending the events. Easy access shall mean that the restrooms are within 200 feet and accessible.

Note 7: Mounting heights for fixtures. Fixtures installed for use by persons with disabilities shall have mounting heights as required by law.

Kindergarten Areas	Primary 1-3 Grades	Intermediate 4-6 Grades	Junior High 7-8 Grades	Senior High 9-12 Grades
Drinking fountains, spout outlet.				
24”	30”	30”	34”	34”
Lavatories				
25”	28”	28”	30”	30”
Shower heads, boys				
60”	66”	66”	72”	72”
Shower head, girls				
54”	60”	60”	66”	66”
Sinks, in classroom counters				
26”	32”	32”	36”	36”
Urinals, top of lip				
--	15”	17”	23”	23”
Water closets, top of seat				
11”	16”	16”	16”	16”

Table 9. Dormitories, Boarding Houses

Number	WC	Lav	Showers
1 - 20	2	1	2
21 - 40	3	2	3
41 - 60	4	2	4
61 - 80	5	3	5
81 - 100	6	3	6

One DF for each 100 or fraction thereof or 1 per floor.
One MS per floor.
One clothes washer for each 10 people.
Add 1 WC for each additional 20 or fraction thereof.
Add 1 lav for each additional 40 or fraction thereof.
Add one shower for each additional 20 or fraction thereof.

Note 1: In buildings constructed of multiple floors the fixture count shall be based on the number of occupants of each floor and, accessibility to the fixtures shall be on each floor.

Note 2: Rooming houses:

(a) Rooming houses with shared bathroom and toilet facilities must conform to the following minimum number of fixtures: one water closet; one lavatory; and one bathtub or shower and one clothes washer for each four rooming units, or portion thereof.

((b) Toilet rooms and bathrooms shall provide privacy and shall not constitute the only passageway to a hall or other space or to the exterior. A door and interior locking device shall be provided for all common or shared bathrooms and toilet room in a multiple dwelling. Toilet rooms and bathrooms shall be accessible on each floor from a common hall or passageway.

Table 10. Hospitals

	WC	Lav	SH	MS	DF
Individual Rooms	**1**	**1**	**1**	**1 per floor**	**0**
Wards (1 per 4 patients)	**1**	**1**	**1**	**1per floor**	**1**

Hospital employee areas, hospital waiting rooms, Surgical Waiting Room						
Number	**WC Male**	**UR Male**	**Lav Male**	**WC Female**	**Lav Female**	**DF**
1 - 25	1	0	1	1	1	0
26 - 50	1	1	1	2	1	0
51 - 75	1	1	1	3	2	0
76 - 100	1	2	2	4	2	1
101 - 150	2	2	2	5	3	1
151 - 200	3	2	3	6	3	1
201 - 250	4	3	4	7	4	2
251 - 300	5	3	4	8	4	2
301 - 350	6	4	5	9	5	2
351 - 400	7	4	6	10	5	3

	Occupant Load Factor SF/Person	Multiply By
Administration Offices	160	1.00
Surgical Waiting Room	15	1.00
Public Waiting Room (lobby)	200	1.00

Add one water closet or one urinal for each additional 100 males or fraction thereof. Urinals may be substituted for water closets provided the number of urinals shall not be more than twice the number of water closets.
Add one lavatory for each additional 200 males or fraction thereof.
Add one water closet for each additional 100 females or fraction thereof.
Add one lavatory for each additional 200 females or fraction thereof.

Note 1: In buildings constructed of multiple floors, the fixture count shall be based on the number of occupants of each floor and accessibility to the fixtures shall be on each floor.

Note 2: Separate toilet rooms shall be provided for employees areas see Table 5.

Sec. 49-637. Space requirement for nonhandicapped plumbing fixtures.
The following are minimum clearances:
(a) Water closets:

(1) Fifteen inches from the center of the fixture to any wall, partition, or vanity. (See figure 673(a)(1))

(2) Twenty-one by twenty-one (21 x 21) inches of clearance in front of the fixture. (See figure 637(a)(2))

(3) Thirty-one (31) inches from the center of one water closet to the center of any other water closet or urinal. (See figure 637(a)(3)

(4) The minimum size stall or compartment shall be thirty (30) inches in width and sixth (60) inches in length. (See figure 637(a)(4))

(5) There shall be a minimum of four (4) inches between a water closet and a lavatory. (See figure 637(a)(5))

(6) There shall be minimum twelve (12) inches clear space above the tank or flush valve of the water closet.

(b) Urinals:

(1) There shall be fifteen (15) inches from the center of the urinal to any wall or partition. In no case shall there be less than four (4) inches from the wall and the side of the urinal as measured from the widest point of the urinal. (See figure 637(b)(1))

(2) There shall be thirty (30) inches from the center of one urinal to the center of any other urinal or water closet. (See figure 637(b)(2))

(3) There shall be a twenty-one by twenty-one (21 x 21) inch clearance in front of any wall or floor urinal and eighteen by eighteen (18 x 18) inches clearance in front of pedestal urinals. (See figure 637(b)(3))

(4) There shall be a partition between any urinal and lavatories.

(5) The maximum height of a wall mounted urinal shall be twenty-four (24) inches from finish floor to the rim of the urinal.

(c) Lavatories:

(1) There shall be a minimum four (4) inches from the side or outer edge of each lavatory to any wall or partition. (See figure 637(c)(1))

(2) There shall be a minimum four (4) inches from the side or outer edge of each lavatory to any other lavatory, water closet or tub. (See figure 637(c)(2))

(3) There shall be a clear floor space of twenty-one by twenty-one (21 x 21) inches in front of each lavatory. (See figure (c)(3))

(d) Showers:

(1) The minimum shower inside measurements shall be thirty by thirty (30 x 30) inches. (See figure 637(d)(1))

(2) There shall a clear floor space of twenty-four by twenty-four (24 x 24) inches in front of the opening. (See figure 637(d)(1))

(e) Tub:

(1) There shall be a minimum clear floor space of twenty-one by twenty-one (21 x 21) inches for entering or exiting of the tub. (See figure 637(e)(1)

Sections. 49-638--49-699. Reserved.

ARTICLE VII. QUALITY AND WEIGHT OF MATERIALS

Sec. 49-700. Condition of materials.
All materials used in any drainage or plumbing system or parts thereof shall be new material and free from defects.

Sec. 49-701. Minimum standards.
Materials specified in this chapter are the minimum approved standards for material to be used in the construction, alteration, or repair of any plumbing or drainage system. Exception: An extension of, addition to, or relocation of

existing soil, waste, or vent pipe with material of like grade or quality not to exceed 15 feet is allowed if the existing soil, waste, or vent pipes were installed in accordance with the plumbing code in effect prior to the effective date of this Code.

Sec. 49-702. Rainwater leaders.
All inside rainwater leaders shall be of cast-iron soil pipe, galvanized steel, galvanized wrought-iron, or type K, L, M or DWV copper pipe. Fittings and joints for each type of pipe used shall be as specified elsewhere in this chapter.

Sec. 49-703. Traps and tubing for commercial installations.

(a) Concealed traps above the finished floor shall be service weight cast-iron soil pipe, no-hub cast-iron pipe, Durham, DWV copper, or cast brass not less than 3/32 inch thick.

(b) Traps below the finished floor in ground (soil) shall be service weight cast-iron soil pipe.

(c) Traps shall be properly vented and have a trap seal of not less than two (2) inches or more than four (4) inches. Traps shall be located as close to the fixture waste opening as possible.

(d) Traps located below the finished floor in a blocked out pit, free of ground (soil) and easily accessible, may be of the same material as specified in paragraph (a) of this section.

(e) Bath tub traps shall be installed in a location for easy, accessible cleaning.

(f) Bath tub waste and overflow shall be not less than 17 gauge brass, schedule 40 ABS or schedule 40 PVC plastic pipe or tubular waste and overflows meeting ASTM F-409.

(g) Tubing used for tail pieces on sinks, lavatories, traps and continuous waste shall be not less than 17 gauge brass. Exposed traps and tubing for final fixture connection may be slip joint.

(h) In apartments only, a single or multiple compartment sink with a garbage disposal unit installed may be connected into a single 1½ inch "P" trap. The trap shall be connected into the vertical waste. A residential dishwasher, properly trapped, may be connected into the same vertical stack using a separate connection to be placed not more than 12 inches below the waste opening for the sink. The stack shall be not less than two inches to the top tee. The vent shall be not less than 1½ inches in diameter from and above the sink waste connection.

(i) A residential dishwasher may be connected to a factory supplied inlet on a garbage disposal or a wye branch tail piece. (See figure 608(a)(2))

(j) For traps and tubing for corrosive and acid waste, see section 49-1005.

Sec. 49-704. Traps and tubing for dwelling units and townhouses.

(a) Concealed traps above the finished floor shall be service weight cast-iron soil pipe, no-hub cast-iron pipe, Durham, DWV copper, or cast brass not less than 3/32 inch thick and schedule 40 ABS or schedule 40 PVC plastic pipe.

(b) Traps below the finished floor in ground (soil) shall be service weight cast-iron soil pipe or schedule 40 ABS or schedule 40 PVC.

(c) Traps shall be properly vented and have a trap seal of not less than two (2) inches or more than four (4) inches. Traps shall be located as close to the fixture waste opening as possible.

(d) Residential type dishwashers may be connected to a factory supplied inlet on a garbage disposal or branch tail piece. (See figure 608(a)(2))

(e) Traps located below the finished floor in a blocked out pit, free of ground (soil) and easily accessible may be of the same material as specified in paragraph (a).

f) Bath tub traps shall be installed in a location for easy, accessible cleaning.

(g) Bath tub waste and overflow shall be not less than 17 gauge brass, schedule 40 ABS or schedule 40 PVC plastic pipe or tubular waste and overflows meeting ASTM F-409.

(h) Tubing used for tail pieces on sinks, lavatories, traps and continuous waste shall be not less than 17 gauge brass, schedule 40 ABS or schedule 40 PVC plastic pipe or ABS and PVC tubular meeting ASTM F-409. Exposed traps and tubing for final fixture connection may be slip joint.

(i) A single or multiple compartment sink with a garbage disposal unit installed may be connected into a single 1½ inch "P" trap. The trap shall be connected into the vertical waste. A residential dishwasher, properly trapped, may be connected into the same vertical waste using a separate connection to be placed not more than 12 inches below the waste opening for the sink. The stack shall be not less than two inches to the top tee. The vent shall be not less than 1½-inches in diameter from and above the sink waste connection. (See figure 704(i))

Sec. 49-705. Increasers and reducers.
When any soil, waste or vent pipe is reduced or increased, an approved transition fitting shall be used; tail end pieces or one hub caulked in another to make such increases or reduction in pipe size shall not be used for that purpose. A no-hub reducing coupling may be used on the horizontal only.

Sec. 49-706. Backwater valves and gate valves installed in building drain or building sewers.
Backwater valves shall have cast-iron bodies with bearing parts of noncorrosive metal or material and shall be constructed to ensure a positive mechanical seal and remain closed except when discharging wastes. Valve access covers shall be bolted type with a gasket. Every valve, when used in drainage service, shall be fullway type with working parts of noncorrosive metal. Valves four inches or more in diameter shall have cast-iron or brass bodies.

When installed below a finished floor and less than two (2) feet deep the minimum access opening shall be twenty-four (24) inches by twenty-four (24) inches.

When installed outside the building or more than two (2) feet deep a minimum forty-eight (48) inch manhole shall be used. Exception: Backwater valves for dwelling units and townhouses may be PVC or ABS plastic but shall not be co-mingled with other materials.

Sec. 49-707. Cleanouts and test tees.
Test tees for soil and waste piping shall be designed to admit a test plug. Cleanout tees need not be designed to admit test plugs. Where cleanout plugs are flush with floor, a brass countersunk plug may be used. Cleanout plugs may be brass, cast-iron or plastic with standard iron pipe size threads plugs. Cleanouts in interceptors shall be standard pipe thread brass or cast-iron plugs. Loose plate or bolted cover cleanouts will not be permitted. Cleanout size shall comply with section 49-1420. Plastic plugs must comply with section 49-721

Sec. 49-708. Relief valves.
All relief valves shall conform to sections 49-1604, 49-1605, and 49-1606.

Sec. 49-709. Closet floor flanges.
Closet floor flanges shall be PVC, ABS, brass, malleable cast-iron or cast-iron with a thickness of no less than 3/16 inch. All closet screws and closet flange bolts shall be of brass. There shall not be any intermingling of dissimilar materials. All cast-iron water closet floor flanges shall be connected by means of a lead and oakum joint or hubless or push joint connection.

Sec. 49-710. Combination ferrules.
The installation of combination lead bends, combination solder nipples, or lead ferrules is strictly prohibited.

Sec. 49-711. Durham system.
When a Durham system of plumbing is installed, all soil and waste fittings, except expansion joints, shall be the recessed drainage type, either plain, tar coated or galvanized, and shall be long turn pattern where possible.

Pipe installed above ground shall be galvanized steel, galvanized wrought iron, or cast-iron. Underground piping shall be bell and spigot cast-iron. All vent pipe shall be galvanized steel, galvanized wrought iron, or cast-iron.

Vent fittings shall be plain cast iron, recessed drainage or galvanized malleable screw type. Screw pipe shall be thoroughly reamed before being placed in position.

Sec. 49-712. All-copper soil, waste and vent installations.
All-copper installations shall begin at the cast-iron pipe a minimum of one inch above the floor. Copper tube used in drain, soil, waste and vent lines shall be seamless, cold drawn hard copper tubing, ASTM B88 type K, L, M, or DWV. Fittings used for waste and vent shall be cast or wrought drainage, sweat solder type, machined with pitch. No copper waste piping shall be permitted underground.

Sec. 49-713. Water piping.
All pipe and fittings used in the installation of potable and nonpotable water supply systems shall conform to NSF 61 Standard and the following.

(a) Copper tubing for inside above grade water supply distribution systems shall be seamless, cold drawn, commercially pure, hard copper tubing, ASTM B88, type K, L, or M; provided, that pre-formed piping shall be type K or L. On remodeling or alteration work, it shall be permissible to install soft copper ASTM B88 type K or L when placed vertically in partitions. All joints shall be sweat type joints, grooved joining system or copper press fit fittings.

(b) Below grade water supplies one inch and smaller shall be soft type K copper of one continuous piece of pipe. Sizes larger than one inch shall be soft or hard drawn type K copper and all joints shall be hard soldered.

(c) Galvanized schedule 40 (IPS) shall conform to ASTM A53 standard specifications for welded and seamless steel pipe.

(d) All ductile iron water pipe shall conform to the ANSI A21.51 standard and shall be cement lined in compliance with the AWWA C104 standard.

(e) Chlorinated Polyvinyl Chloride (CPVC) shall conform to ASTM D2846.

(1) CPVC shall not be co-mingled or inserted or mixed with other materials.

(2) When connecting to existing plastic systems, all additional pipe and fittings shall be the same material as the existing system.

(3) It shall only be used above ground.

(4) It may be used in single family dwellings and townhouses and for high purity water in sizes ½ to 1½ inch.

(6) CPVC shall not be installed closer than12 inches from a water heating device.

(f) Cross-linked Polyethylene (PEX) shall conform to ASTM F 876, F877 Standards and may be used for high

purity water only in sizes ½ to 1 inch.

(1) PEX shall not be co-mingled or inserted or mixed with other materials.

(2) When connecting to existing plastic systems, all additional pipe and fittings shall be the same material as the existing system.

(g) Final connections to fixtures and appliances see section 49-812.

Sec. 49-714. Brass and copper pipe.
Brass and copper pipe shall be of standard weight iron pipe size and shall be of the grade known as containing 67 percent copper.

Sec. 49-715. Copper tube sweat fittings.
(a) Water supply piping and vents shall be cast brass with 85 percent copper contents or wrought copper of the same material as copper tubing and shall conform to ASTM B88.

(b) Soil and waste fittings shall be cast brass or wrought and shall be drainage pattern only. Fittings shall be machined to have a pitch.

Sec. 49-716. Water service fittings.
All water service fittings shall conform with the requirements of the Metropolitan Utilities District Water Rules and Regulation .

Sec. 49-717. Flashing.
(a) Stack vents and vent stacks

(1) Pipes passing through a built-up roof shall be made water tight with lead flashing weighing at least 2½ pounds per square foot, properly soldered, with a sleeve extending up, over, and into the top of the pipe.

(2) Pipes passing through an EPDM roof membrane shall be sealed with a molded EPDM flashing clamped to the pipe or an appropriately sized piece of uncured neoprene membrane directly adhered to the pipe.

(3) The plumbing board shall approve all flashing systems as to design and material used. The board shall keep a list of all approved flashings on file with the secretary. The list of approved flashings shall be made available on request.

(4) Plastic piping passing through a roof and not completely covered by the flashing shall be protected by a water-base, synthetic latex paint.

(5) Flashings on pre-engineered metal buildings shall be approved by the manufacture.

(b) Rainwater drains.

(1) Roof drains installed with a built-up roof shall be made tight with a four-pound sheet lead flashing or a flashing manufactured by laminating asphalt impregnated roofing felt to a nonplasticized chlorinated polyethylene with a nominal thickness of 0.040 inch. Flashings must extend at least 12 inches beyond the outer circumference of the stone guard clamping collar. The flashing shall be securely fastened to the drain body with the clamping collar.

(2) EPDM roofing needs no additional flashing. The EPDM roofing is fastened to the drain body with an approved stone guard clamping collar.

Sheet lead shall conform to federal specifications, QQ-L-201

Sec. 49-718. Threaded fittings.

(a) Plain screwed fittings for use with wrought iron or steel pipe vents shall be cast-iron or malleable iron of standard weights and dimensions.

(b) Screwed drainage fittings used on soil, waste or leaders shall be recessed drainage type with a smooth interior water way and with threads tapped out of solid metal.

(c) Screwed fittings for brass or copper pipe shall be cast brass, steam pattern for water supply or vents and recessed drainage type for soil or waste.

(d) Screwed fittings on water supply pipes shall be either brass or galvanized malleable iron.

(e) American tapered pipe thread shall be used on all threaded fittings.

Sec. 49-719. Hub and spigot cast-iron soil pipe.

(a) Pipe and fittings shall be tar coated and shall conform to ASTM Standard A74-87.

(b) Aboveground pipe and fittings shall be supported according to section 49-507.

(c) Horizontal piping underground:

(1) The entire length of the pipe shall be continuously supported on stable grade.

(2) Should an unstable condition be found (such as groundwater or soft muck), the trench shall be over-excavated and stable materials placed in the trench to support the entire length of pipe.

(d) Underground joints shall be lead and oakum or compression joints made as follows:

(1) After properly cleaning the hub and the spigot end of the pipe or fitting, oakum shall be placed in the joint and packed using a packing iron and hammered until it forms a uniform surface one inch from the top of the hub.

(2) Pour molten lead into the joint at one spot between the hub and spigot in one continuous pour until it arches slightly above the top of the hub.

(3) When the lead has cooled, caulk the joint on the inside and then the outside edges using a 16-ounce ball peen hammer and appropriate caulking irons.

(4) Caulking lead shall conform to CS 94041 or Lead Industries Association standards.

(5) Compression joints.

(i) When using cut pipe, the sharp edge must be removed.

(ii) After properly cleaning the hub and spigot insert the gasket into the hub, making sure the retaining flange or collar of the gasket is adjacent to the face of the hub.

(iii) After using a commercial lubricant applied only on the inside of the gasket (unless the pipe manufacturer also recommends lubricating the spigot of the pipe or fitting), align the spigot and hub in a straight line and force the spigot end of the pipe or fitting into the gasket according to the manufacturer's recommendation.

(iv) Gaskets should be stored in a clean, dry area in an undeformed condition away from excessive heat.

(v) All changes of direction should be restrained.

(vi) All compression gaskets shall conform to ASTM C564.

Sec. 49-720. Hubless cast-iron soil pipe and fittings.
Hubless cast-iron soil pipe and fittings may be used for drain, soil, waste and vent piping in all buildings, subject to the following:

(a) Hubless cast-iron soil pipe and fittings shall conform to the Cast-Iron Soil Pipe Institute Standard Specification No. 301-00 and ASTM Standard A888. The manufacture of pipe and fittings shall supply a report to the chief plumbing inspector on a quarterly bases showing compliance with ASTM Standard A48.

(b) Support aboveground shall comply with section 49-507.

(c) The pipe shall be positioned so that the identification markings on the pipe are readily visible for inspection.

(d) The fixture trap must be connected to the drainage system with a threaded connection. A no-hub coupling shall not be used for the final fixture connection, except that pre-molded shower pans or enclosures, roof drains, water closet flanges, a PVC schedule 40 tub waste and overflow and floor drains aboveground may be connected by means of an approved no-hub or push joint connection.

Sec. 49-721. Plastic pipe and fittings for soil, waste and vents.
Polyvinyl chloride (PVC) and Acrylonitrile-butadiene-styrene (ABS) pipe and fittings may be used in single-family dwelling units. Polyvinyl chloride (PVC) pipe and fittings may be used in Group R-2 apartment buildings of "Type V" construction, as defined by chapter 43 of the Omaha Municipal Code, provided that they are equipped with an NFPA 13 or NFPA 13R automatic fire sprinkler systems throughout, are not more than three stories high and do not contain mixed use occupancy. Plastic pipe installations shall comply with the following standards:

(a) Polyvinyl chloride (PVC).

(1) Shall be schedule 40 (IPS).

(2) Shall meet ASTM Standard D2665-89a or F891.

(3) Solvent cement shall meet ASTM D2564-80.

(4) Primers shall meet ASTM F656-89.

(5) All solvent cement joints shall be made according to ASTM D2855, D2564 and F402.

(6) Shall have third party National Sanitation Foundation approval and be so designated.

(7) Shall be supported aboveground according to section 49-507.

(8) Shall not be installed in return air plenums except in single family dwellings.

(b) Acrylonitrile-butadiene-styrene (ABS).

(1) Shall be schedule 40 (IPS).

(2) Shall meet ASTM Standard D2661-90 or F628-85.

(3) Solvent cement shall meet ASTM D2235-88.

(4) All solvent cement joints shall be made according to ASTM D2661-90 and F402.

(5) Shall be supported aboveground according to section 49-507.

(c) Co-mingling of material.

(1) ABS and PVC shall not be co-mingled, inserted or mixed with other materials.

(2) When connecting to existing plastic systems, all additional pipe and fittings shall be the same material as the existing system.

(d) Storage and protection of plastic.

(1) Pipe and fittings should not be stored in direct sunlight.

(2) Pipe shall be stored in such a manner as to prevent sagging or bending.

(3) Plumbing vents exposed to sunlight shall be protected by a water based synthetic paint.

(4) Pipe passing through wood studs or plates shall be protected from puncture by a minimum 1/16-inch-thick steel plate.

(e) Thermal expansion.

(1) Support the pipe according to section 49-507 but do not rigidly restrain the pipe at branches or change of direction.

(2) Do not anchor pipe rigidly in walls. All holes shall be adequately sized to allow for free movement.

(3) The tables below are provided to show examples of thermal expansion. Temperatures listed are the maximum expected operating range. Consult the manufacturer's data for the material to be installed.

TABLE 723 A.
THERMAL EXPANSION FOR PVC (INCHES)

Temperature Range

Length (feet)	**40F**	**50F**	**60F**	**70F**	**80F**	**90F**	**100F**
20	0.278	0.348	0.418	0.487	0.557	0.626	0.696
40	0.557	0.696	0.835	0.974	1.114	1.235	1.392
60	0.835	1.044	1.253	1.462	1.670	1.879	2.088
80	1.134	1.392	1.670	1.949	2.227	2.506	2.784
100	1.392	1.740	2.088	2.436	2.784	3.132	3.480

TABLE 723 B.
THERMAL EXPANSION FOR ABS (INCHES)

Temperature Range

Length (feet)	40F	50F	60F	70F	80F	90F	100F
20	0.536	0.670	0.804	0.938	1.072	1.206	1.340
40	1.070	1.340	1.610	1.880	2.050	2.420	2.690
60	1.609	2.010	2.410	2.820	3.220	3.620	4.020
80	2.143	2.680	3.220	3.760	4.290	4.830	5.360
100	2.680	3.350	4.020	4.700	5.360	6.030	6.700

(f) Below ground installation.

(1) The pipe shall be secured to the bottom of the trench at a maximum of eight feet and backfilled to the spring line of the pipe for ground work inspection.

(2) Bedding material may consist of dirt, sand, gravel, or crushed rock. Backfill and bedding material shall not exceed 1¼ inches in diameter. No frozen fill material is acceptable.

(3) Pipe shall not be installed directly on mud, muck, standing water, or frozen ground. If such an unstable condition exists, the trench shall be over-excavated and bedding material as listed above other than dirt shall be placed in the trench to support the entire length of the pipe.

(4) Provide a minimum one-half-inch clearance around the entire outer circumference of the pipe or fitting when penetrating concrete. Space between pipe and concrete shall be sealed or insulated or caulked. Exceptions are floor drains and closet bends.

(5) The pipe shall be positioned in the trench so that the identification markings on the pipe are readily visible for inspection.

(6) The minimum size waste, soil, or vent below grade shall be two inches (IPS).

(7) No vent type fittings or short turn elbows will be allowed below grade except that short turn 90's will be allowed for closet bends.

(8) Threaded fittings shall not be used.

(9) Except as listed above these materials shall be installed according to ASTM standards D2321, D2564-88, D2855-90, and F402.

Sec. 49-722 High density polyethylene plastic pipe (HDPE) SDR 17 for sanitary and storm sewers.

(a) High density polyethylene plastic pipe and fittings(HDPE) SDR 17 shall conform to ASTM F-714, ASTM D1248, ASTM D3550 Standard.

(b) All sections of HDPE pipe shall be assembled and joined on the job site.

(c) Jointing shall be accomplished by the heating and butt-fusion or electrofusion methods in strict conformance with the manufacturer's printed instructions.

(d) The joint strength shall be equal to or greater than the pipe.

(e) All master plumbers, journeyman plumbers or licensed sewer layers shall be fully trained and certified in the

butt-fusion or electrofusion methods by the manufacturer of the equipment.

(f) The bead on the inside of the pipe shall be removed.

Sections 49-723—49-799 Reserved.

ARTICLE VIII. JOINTS AND CONNECTIONS

Sec. 49-800. Tightness.
All joints and connections shall be made tight.

Sec. 49-801. Caulked joints.
Caulked joints for cast iron and bell and spigot soil pipe shall be firmly packed with oakum or hemp and filled with molten lead not less than one inch deep. Lead shall be run in one pouring and caulked tight with sharp and properly shaped caulking irons. No concrete, wax, paraffin, plaster, or other improper substance shall be used on any caulked joint.

Sec. 49-802. Threaded joints.
All screw joints shall be American National Taper pipe thread (F.S. GGG-P, 351 a.). All burrs shall be removed. Pipe ends shall be reamed or filed out to full size of bore, and all chips shall be removed. Pipe joint compound will be permitted only on male threads.

Sec. 49-803. Copper tube grooved joining system.
(a) Water supply fittings shall be full flow wrought copper conforming to ASTM B88 and B75.

(b) Couplings shall be rigid ("zero-flex") style consisting of a ductile cast iron housing conforming to ASTM A-536 and a synthetic rubber gasket.

(c) Gaskets shall be designed for domestic water service from +30 degrees Fahrenheit to +230 degrees Fahrenheit and shall be molded of an EPDM compound conforming to ASTM D-2000.

(d) Couplings shall be installed in accordance with the manufacturer's instructions in order to obtain a system capable of withstanding a 300 psig static test.

(e) Copper tube to be used with rolled grooved couplings shall conform to ASTM B88 and shall be roll grooved in accordance with the manufacturer's instructions.

(f) Grooved copper joining systems shall be supported in accordance with section 49-507.

(g) These materials shall only be installed on the down streamside of the first valve or bypass tee after the meter.

Sec. 49-804 Galvanized grooved joining system.
(a) Water supply.

(1) Water supply fittings shall be full flow ductile iron hot dip galvanized conforming to ASTM A153 or zinc electroplating to ASTM B-633 and NSF 61.

(2) Pipe used for water supply systems shall be Schedule 40 galvanized steel pipe conforming to ASTM A53 and NSF 61.

(3) Couplings shall be rigid ("zero-flex") style consisting of a ductile cast iron housing conforming to ASTM A-536 Grade 65-45-12 and a synthetic rubber gasket.

(4) Gaskets shall be designed for domestic water service from -30 degrees Fahrenheit to +230 degrees Fahrenheit and shall be molded of an EPDM compound conforming to ASTM D-2000.

(5) Couplings shall be installed in accordance with the manufacturer's instructions in order to obtain a system capable of withstanding a 300 psig static test.

(6) These materials shall only be installed on the down streamside of the first valve after the meter or the tee for a by-pass.

Sec. 49-805. Soldered or sweat joints.
All sweat joints for copper tubing used for potable water shall be made with the proper fittings. Surfaces to be soldered shall be cleaned bright. The joints shall be properly reamed, fluxed and made with solder that complies with state law.

Sec. 49-806. Slip joints.
Slip joints may be used only on exposed tubular waste connections between the rough opening and the fixture.

Sec. 49-807. Unions.
Galvanized ground joint unions, or tucker type unions only, will be permitted on durham systems. Dielectric unions and fittings may be used to join dissimilar materials and shall be readily accessible.

Sec. 49-808. No-hub couplings.
All no-hub (hubless) couplings shall conform to the following:

(a) The coupling for hubless cast-iron soil pipe above ground shall comply with Cast-Iron Soil Pipe Institute Standard Specification (CISPI) No. 310-00 and ASTM C564.

(b) The coupling for hubless cast-iron soil pipe below ground shall comply with ASTM Standard ASTM C1540

(c) Joints between no-hub (hubless) cast iron and any other approved material shall be made with a solid band stainless steel no-hub coupling complying with ASTM C1277

(d) In remodeling of an existing plumbing system, a solid band 302 stainless steel no-hub coupling may be used to connect new materials to an existing lead waste pipe provided that the lead waste is sized to fit the no-hub coupling.

(e) Two-and-one-half-inch no-hub solid band stainless steel couplings may be used for remodeling and repair of 2½ inch Durham waste and vent lines. A floor rest or friction clamp shall be installed at each floor prior to removal of existing pipe.

Sec. 49-809. Steel or wrought iron to cast iron bell and spigot pipe.
Joints between steel, wrought iron, or cast iron screw pipe to cast and cast iron bell and spigot pipe shall be made by means of a properly caulked joint. Screw pipe joints smaller than two inches in diameter shall be made by means of a caulking ferrule.

Sec. 49-810. Copper to cast-iron, steel or wrought iron pipe.
Joints shall be made with approved adapter fittings and caulked or screwed to cast-iron, steel or wrought iron pipe, proper transition coupling or other approved connections.

Sec. 49-811. Brass or copper tubing to lead.
Connections between brass and copper tubing to lead waste shall be made with a proper transition coupling or other

approved connections.

Sec. 49-812. Fixture water supply connection.
All pipe and fittings used in the installation of potable water supply systems shall conform to NSF 61 Standard.

(a) Exposed water tube from the wall or floor to a plumbing fixture shall be type L soft copper tubing or the flexible water supplies braided stainless steel reinforced nylon hose with stainless steel threaded connectors or reinforced nylon hose with a polymer braiding and stainless steel connections conforming to ASME A112.18.6. Such connections shall not exceed three-foot.

(b) Supplies to plumbing appliances such as refrigerators, ice machines, dishwashers, instant water heaters (one-gallon capacity), humidifiers, coffee, tea or chocolate dispensers and purifiers may have the flexible supply sized the same size as the appliance connector. Each appliance shall have a separate stop from a minimum one-half-inch rigid water pipe. No saddle valves shall be allowed.

(c) Appliance supplies of type L soft copper may exceed the three (3) foot limitations for structural and mobility reasons. Connections shall be sweat solder, flared, screwed, or ground joint. Flexible supplies shall be installed in a workmanlike manner.

(d) Water heater, water conditioner and like fixtures shall not be connected by a flexible connection.

Sec. 49-813. Floor and wall fixture settings.
The connection between drainage pipes and water closets, service sinks, pedestal urinals, wall urinals and earthenware trap standards shall be made by means of ABS, PVC, brass, or iron flanges that are glued, caulked, soldered, or screwed to the drainage pipe. The connection shall be bolted to the earthenware by means of brass bolts, nuts and washers with an approved gasket, washer or approved setting compound. Floor flanges shall be fastened securely to the floor using brass screws or brass bolts, nuts and washers.

Sec. 49-814. Access to supply and waste connections.
Built-in bathtubs or other fixtures having concealed slip joint connections, traps or valves shall be provided with suitable access panels, utility chambers, or pipe spaces so placed as to make such connections and traps accessible for inspection and repairs.

Sec. 49-815. Sisson joints.
Sisson joints shall be used only where it is impracticable to make connection otherwise. On stacks the upper portion must have a floor rest or pipe clamp placed so the upper portion of the stack cannot settle.

Sec. 49-816. Compression joints.
(a) Joints for hub and spigot pipe may be made by the use of a compression gasket that is compressed when the spigot is inserted into the hub of the pipe. Material for compression gaskets shall conform to ASTM Standard C-564.

(b) Compression joints may be used for the final connection for roof drains, floor drains, shower drains and closet flanges only.

Sec. 49- 817 Polyethylene.
Polyethylene cross-linked (PEX) fittings and connections shall comply with the following:

(a) May be used for high purity water only in sizes ½ through 1 inch.

(b) ASTM F 1960-04 Standard for cold expansion fittings with PEX reinforcing rings.

(c) ASTM F 2080 Standard for cold expansion fittings with metal compression sleeves.

(d) ASTM F 1807 Standard for metal insert fitting utilizing a copper crimp ring for SDR9.

(e) ASTM F 2098 Standard for Stainless steel clamps for securing SDR9 to metal insert fitting.

(f) PEX ~~a~~ shall not be co-mingled, inserted or mixed with other materials.

(g) When connecting to existing plastic systems, all additional pipe and fittings shall be of the same material as the existing system.

(h) All fittings and clamping systems shall be compatible with the type of pipe used.

Sec. 49-818 Chlorinated polyvinyl chloride.
All joints shall be socket type employing solvent cements and meet the following.

(a) CPVC shall not be co-mingled or inserted or mixed with other materials.

(b) When connecting to existing plastic systems, all additional pipe and fittings shall be of the same material as the existing system.

(c) All joint surfaces for chlorinated polyvinyl chloride (CPVC) shall be clean and made in accordance with ASTM D 2846.

(d) Joints shall be made with a solvent cement, orange in color conforming to ASTM F 493.

(e) CPVC may be used for high purity water in sizes ½ through 1½ inch.

Sec. 49-819 Copper press fit fittings.
(a) May be used with Type M, L or K copper pipe meeting ASTM B-88 and B75.

(b) O-rings shall be EPDM ASTM D-2000.

(c) Shall not be installed when the temperature is below 20 degrees Fahrenheit.

(d) Shall not be installed below ground.

(e) These materials shall only be installed on the down stream side of the first valve or bypass tee after the meter.

(f) When used with Type M copper the distance between fittings shall be equal to three (3) times the pipe diameter.

(g) A solder joint shall not be made within twelve (12) inches of a press fit fitting.

(h) All pipe shall be reamed and chamfer.

Sec. 49-820 Pipe and fittings for sanitary and storm sewers.
All pipe and fittings for sanitary and storm sewers shall conform to section 49-1732.

Sec. 49-821 High density polyethylene plastic pipe (HDPE) SDR 17 for sanitary sewers.
(a) High density polyethylene plastic pipe and fittings (HDPE) SDR 17 shall conform to ASTM F-714, ASTM D1248, ASTM D3550 Standard.

(b) All sections of HDPE pipe shall be assembled and joined on the job site.

(c) Jointing shall be accomplished by the heating and butt-fusion or electrofusion methods in strict conformance with the manufacturer's printed instructions.

(d) The joint strength shall be equal to or greater than the pipe.

(e) All master plumbers, journeyman plumbers or licensed sewer layers shall be fully trained and certified in the butt-fusion or electrofusion methods by the manufacturer of the equipment.

(f) The bead on the inside of the pipe shall be removed.

Sections 49-822—49-899 Reserved.

ARTICLE IX. SOIL AND WASTE PIPING

Sec. 49-900. Joints and connections.
Pipe and fittings for the various systems of drainage and for each type of piping shall comply with standards as given in section 49-800 through 49-821.

Sec. 49-901. Aboveground piping within buildings.
Soil and waste piping installed aboveground for drainage systems within a building shall be of cast-iron, galvanized wrought iron, galvanized steel, brass, copper. For single- family dwellings ABS or PVC plastic, may be used as provided for in this chapter. Polyvinyl chloride (PVC) pipe and fittings may be used in Group R-2 apartment buildings of "Type V" construction, as defined by chapter 43 of the Omaha Municipal Code, provided that they are equipped with an NFPA 13 or NFPA 13R automatic fire sprinkler systems throughout, are not more than three stories high and do not contain mixed use occupancy: see section 49721.

Sec. 49-902. Underground piping within buildings.
Soil and waste piping installed underground, shall be bell and spigot or no-hub cast iron. For single family dwellings ABS or PVC plastic, may be used as provided for in this chapter. Polyvinyl chloride (PVC) pipe and fittings may be used in Group R-2 apartment buildings of "Type V" construction, as defined by chapter 43 of the Omaha Municipal Code, provided that they are equipped with an NFPA 13 or NFPA 13R automatic fire sprinkler systems throughout, are not more than three stories high and do not contain mixed use occupancy see section 49-721.

Sec. 49-903. Fixture unit values--Generally.
Fixture unit values as given in section 49-904 designate the relative load weight of different kinds of fixtures, which shall be employed in estimating the total load carried by soil and waste pipe. Fixtures and devices not shown shall be rated in accordance with the discharge opening as computed in section 49-905.

Sec. 49-904. Rated fixtures.
Unit values for rated fixtures are as follows:

Kind of Fixture		Trap Size (inches)	Branch (inches)	Fixture Unit
Bar sink:				
Residential	See Note 8	1¼	1¼	1
Commercial W/4 Compartments		1½	1½	2
Bathtub		1½	1½	2
Beer taps	See Note 1	1¼	1¼	1
Bidets		1½	1½	2
Cuspidors		1¼	1¼	1
Dental units		1¼	1¼	1

Disposal:				
Residential		1½	1½	2
Commercial W/2 inch trap	See Note 7	2	2	2
Commercial W/3 inch trap	See Note 7	3	3	3
Drinking fountain		1¼	1¼	1
Dishwasher:				
Residential	See Note 2	1½	1½	2
Commercial				
Single Rack	See Note 2	2	2	2
Conveyor Type		3	3	3
Floor drain		2 up	2 up	2 up
Floor sink		2 up	2 up	2 up
Flushing rim sink		3	3	6
Glass washer		1½	1½	2
Laundry sink		1½	1½	2
Lavatory (basin)		1¼	1¼	1
Mop sink (floor outlet):				
2- inch		2	2	2
3- inch		3	3	3
Service sink:				
With a 2 inch trap standard		2	2	2
With a 3 inch trap standard		3	3	3
Shower stall	See Note 6	2	2	2
Sink-residential (Kitchen) W/dishwasher/ disposal		1½	1½	2
Sink--commercial 2 or 3-compartment		2	2	3
Sink-- commercial pot		1½	1½	2
Sitz bath		1½	1½	2
Shampoo sink		1½	1½	2
Urinals:				
Floor urinal		2	2	2
Pedestal urinals		3	3	6
Wall urinal (exposed trap)	See Note 3	1½	1½	2
Wall urinal (integral trap)		2	2	2
Trough urinal	See Note 4	PB	PB	PB
Water closet				
Residential		3	3	3
Commercial		3	3	4
Places of Assembly and Establishments Serving Liquor		3	3	6
Wash fountains		2	2	2
Washers, clothes:				
Residential	See Note 5	2	2	3
Commercial (pump)	See Note 5	2	2	3
Commercial (gravity)		4	4	6

Note 1: Beer taps should be run indirect when possible see section 49-1004.

Note 2: See section 49-608

Note 3: Repair and replacement of existing fixture only.

Note 4: Plumbing board approval required.

Note 5: Clothes washers in groups of three or more shall be rated at six units each for the purpose of common waste pipe sizing.

Note 6: A shower room having multi-shower valves and heads shall be serviced by a minimum three (3) inch drain for each 10 valves or heads or fraction thereof. Each drain will be rated as three (3) fixture unit. Shower rooms having more than two shower stalls or a shower room with multi-shower valves shall provide a two (2) inch floor drain in the area of the stalls or near the entrance to the shower room.

Note 7: Disposal shall not be installed in a commercial kitchen.

Note 8: A bar sink with a 3½ inch diameter strainer will be rated as two (2) fixture units and shall have a minimum 1½ inch waste opening.

PB = Plumbing board approval required.

Sec. 49-905. Unrated fixtures.

Fixtures not listed in section 49-904 shall be rated on the basis of discharge to the soil or waste system. For calculation purposes, a rated flow of 7.5 GPM will be considered as the equivalent of one fixture unit.

Sec. 49-906. Cooling tower drains.

All cooling tower drains and overflows shall be discharged into a special waste opening or into a floor drain, connected to the sanitary sewers. Cooling towers or other special devices wasting water shall not be allowed to discharge onto public property or other private property, thereby creating a continuous nuisance or dangerous condition.

Sec. 49-907. Soil, waste and vent stacks generally.

Buildings shall have soil, waste, or vent stacks extending through the roof. Stacks must be run as direct as possible. The required size of soil or waste stacks shall be determined by the distribution and total of all fixtures connected to the stack in accordance with section 49-908.

Sec. 49-908. Soil and waste stack sizes.

Soil and waste stacks shall conform to the following:

Stack Size (inches)	Maximum Length	Maximum FU	Maximum WC	Maximum FU On A Branch Interval
1¼	45	1	0	0
1½	60	3	0	0
2	75	16	0	8
2½	105	32	0	16
3 (See Note:4)	150	60	3	32
4	225	240	24	72
5	300	600	48	144
6	400	1,000	96	288
8	600	3,675	300	576
10	N/A	5400	N/A	702
12	N/A	8400	N/A	1260

Fixture loads on branch lines are based on ¼ inch per foot.
FU = Fixture units
WC = Water closet

Note 1 Maximum length shall be the developed length of any soil or waste line from its originating point to the last fixture opening.

Note 2: All clothes washers and shower drains shall have an independent two-inch waste connected to a three-inch or larger soil or waste line. Exception: A clothes washer may be connected to an existing two-inch waste on remodels if approved by the chief plumbing inspector.

Note 3: A branch shall be any soil or waste line not vented full size.

Note 4: Maximum of three (3) clothes washers.

Sec. 49-909 Capacities of horizontal building drains and building sewers.

Diameter of pipe. (inches)	**Permissible number of fixture units**					
	1/16 inch per foot	1/8 inch per foot	1/4 inch per foot	1/2 inch per foot	Maximum Length	Maximum Number of WC
1¼			1	1	45	0
1½			3	3	60	0
2 Note 1			16	16	75	0
3 Note 2		36	48	70	150	3
4 Note 3		180	216	250	Unlimited	
5	360	400	480	560	Unlimited	
6	600	660	790	940	Unlimited	
8	1,400	1,600	1,920	2,240	Unlimited	
10	2,400	2,700	3,240	3,780	Unlimited	
12	3,600	4,200	5,000	6,000	Unlimited	
15	7,000	8,300	10,000	12,000	Unlimited	

Note 1: Maximum of three (3) two-inch floor drains.

Note 2: (a) Maximum of three (3) clothes washers.

(b) Four W. C. may be installed in single-family dwellings provided that the W.C. uses 1.6 gal per flush.

Note 3: (a) A maximum of 30 back-to-back clothes washers may be installed on a four-inch waste. Increase to six-inch thereafter.

(b) A maximum of 22 in-line clothes washers on a four-inch waste. Increase to six-inch thereafter.

(c) A maximum of four discharge hoses from clothes washers shall be permitted for each four-inch trap with a standpipe.

Sec. 49-910. Branch soil and waste lines.
A branch soil and waste line may be extended to the first floor to receive the discharge of not more than one water

closet and one lavatory (basin), subject to the following provisions: (See figure 910)

(a) The vertical riser shall not exceed 15 feet.

(b) The stack vent may be reduced to 1½ inches with approved reducing fittings. Heal inlet one-quarter bends shall be installed vertically.

(c) When a stack is extended to receive fixtures from floors above the first floor or extended to the first floor to receive more than one closet, the stack shall be run full size. (See figure 910(c))

(d) A separate waste may be connected to a horizontal or vertical branch below the water closet and extended horizontally and vertically for waste on the first floor and above. Fixture units are not to exceed the branch chart in section 49-908. (See figure 910(d).

Sec. 49-911. Soil and waste systems located below the building sewer or public sewer.
When all or part of the building drainage system cannot be drained by gravity to the building drain, building sewer, private sewer or city sewer the following requirements shall apply:

(a) Lifting equipment and piping shall be considered part of the plumbing system.

(b) The soil and waste systems shall discharge into an airtight sump or receiving tank located to receive the sewage by gravity.

(c) Soil, waste and vent piping for fixtures discharging into the sump or receiving tank shall be installed in accordance with the requirements for a gravity system.

(d) Shall have a minimum 2 inch discharge. The waste fixture unit is based on the gallons per minute discharge of the pump divided by 7½.

(e) All discharge piping shall be labeled "Pressure Waste Line" and no other waste shall be connected to this line.

(f) The system shall be connected to the building drain or building sewer with a full flow check valve and gate valve installed in the discharge line not higher than five (5) feet above the top of the sump or tank.

(g) The airtight sump or receiving tank shall be vented. The sump shall be vented according to the manufacturer's recommendations, but not less than a minimum 1½ inches. The vent pipe size is based on the waste fixture unit and the length of the vent pipe in accordance with section 49-1319 The sump vent may be connected to the building venting system except when the soil and waste system is discharged through a pneumatic ejector, then the vent for the sump or receiving tank shall be run independently of other vents.

(h) When sub-drains do not receive the discharge of plumbing fixtures other than a single basement floor drain, or residential clothes washers, the sump or receiving tank is not required to be airtight or vented.

(i) A macerating toilet system may be permitted as an alternate to a sewage pump system when used for a single bathroom or toilet room when in the opinion of the Chief Plumbing Inspector the bathroom or toilet room cannot be installed using a gravity system.

Sec. 49-912. Individual wastewater pumping system.
When in the opinion of the Chief Plumbing Inspector a fixture cannot be installed using a gravity system a sumps design to receive the discharge of a single fixture and installed above the floor shall be installed as follows:

(a) The fixture shall discharge only gray water.

(b) Shall have a maximum 1½-inch inlet and 1½-inch discharge. The waste fixture unit is based on the gallons per minute discharge of the pump divided by 7½.

(c) The cover shall have a gas tight seal.

(d) The sump shall be vented according to the manufacturer's recommendations, but not less than a minimum 1½-inch. The vent pipe size is based on the waste fixture unit and the length of the vent pipe in accordance with section 49-1319.

(e) The sump vent may be connected to the building venting system.

(f) Pumping equipment and piping shall be considered part of the plumbing system and discharge piping shall be labeled "Pressure Waste Line" and no other waste shall be connected to this line.

(g) Full flow check valve installed in the discharge line.

Sec. 49-913. Waste water pumping system servicing more than one fixture.
When in the opinion of the Chief Plumbing Inspector a group of fixture cannot be installed using a gravity system a sump design to receive the discharge of more than a single fixture and installed above the floor shall be installed as follows:

(a) Pumping equipment and piping shall be considered part of the plumbing system. All discharge piping shall be labeled "Pressure Waste Line" and no other waste shall be connected to this line.

(b) The fixtures shall discharge only gray water.

(c) The waste fixture unit for the discharge is based on the gallons per minute discharge of the pump divided by 7½.

(d) Waste and vent piping for fixtures discharging into the sump or receiving tank shall be installed in accordance with the requirements for a gravity system.

(e) The cover shall have a gas tight seal.

(f) The sump shall be vented according to the manufacturer's recommendations, but not less than a minimum 1½ inch. The vent pipe size is based on the waste fixture unit and the length of the vent pipe in accordance with section 49-1319.

(g) The sump vent may be connected to the building venting system. The vents for both gravity and pressurize systems may be combined and only the larger value apply.

(h) Full flow check valve installed in the discharge line.

Sec. 49-914. Subsoil drains.
(a) *Single family:* All exterior and interior subsoil drain piping for single family dwelling is exempt from this section. Except as follows:

(1) No water from a subsoil system shall be permitted to discharge into the sanitary sewer.

(2) All buried discharge piping shall conform to Article XVII and a permit is required.

(3) No water from a subsoil system shall be permitted to flow over public sidewalks or adjacent private property.

(4) Any discharge from sump pumps shall discharged at least three (3) feet away from the building foundation.

(5) If the pump's discharge cannot be piped in such a manner as to avoid the flow of discharged water onto sidewalks, driveways, parking lots or onto adjacent property, the discharge must be piped and

directly connected to a storm sewer. If a storm sewer is not available to the property, the property owner may request the Public Works Department's permission to take the discharge to the street at the gutter.

(6) No discharge from the sump pumps shall create a nuisance.

(b) *Commercial Buildings:* Shall be installed as follows:

(1) Exterior drains may be installed by others to a point four feet from the exterior wall of the building or to a point where the exterior piping would penetrate the exterior wall of the building. Interior drains shall be installed by a licensed master plumber or journeyman plumber employed by a master plumber.

(2) Drains shall be installed in a suitable porous bedding material along with a filter fabric to prevent clogging.

(3) Where placed under the basement floor or encircling the outer building walls, drains shall be at least four inches in diameter. The material shall be perforated schedule 40 PVC or, where the height of backfill does not exceed 12 feet, perforated PVC pipe class D3034 SDR35.

(4) Corrugated plastic pipe will only be allowed for exterior subsoil drains and in no case shall be installed to exceed the manufacturer's recommended crush depth.

(5) A sump pump pit shall be a minimum of 20 inches in diameter and 36 inches in depth. Sump pump pits do not require airtight covers.

(6) When the discharge for a sump pump connects to a storm or a combination sewer, a check valve shall be installed in the discharge line and conform to all of the requirements listed in (a) above.

(c) The portion of the pressure waste piping extended outside of the building line more than four (4) feet shall be schedule 80 PVC pipe and fittings.

(d) When a subsoil drain is connected by gravity to a storm sewer or the building storm drain outside of the building there shall be at the connection a back water valve install on the line from the subsoil drain and located in a minimum 48 inch manhole.

Sec. 49-915. Sump pumps in elevator pits.
Sump pumps located in elevator pits shall be discharge to the sanitary plumbing system through an indirect waste to an approved receiving fixture. The sump or receiving tank is not required to be airtight or vented. No waste or vent piping shall be located with in the elevator shaft.

Sections 49-916—49-999 Reserved.

ARTICLE X. INDIRECT, CHEMICAL AND SPECIAL WASTES

Sec. 49-1000. Indirect waste connections.
The following shall discharge to the building drainage systems through an approved plumbing fixture as described in sections 49-1001 and 49-1002.

(a) A refrigerator, freezer, steam table, or other receptacle or device in which food is stored.

(b) An appliance, device or apparatus used for storage, preparation, or processing of food or drink that are not classed as regular plumbing fixtures, such as culinary sinks.

(c) A drain, overflow, or vent from a water supply system.

(d) Appliances, devices or apparatuses such as sterilizers, swimming or wading pools, water treatment devices, water operated devices, water cooled devices, condensate from mechanical refrigeration or space cooling equipment, commercial dishwashers, or glass washers.

Indirect waste pipes shall be constructed of materials listed in Article VII of this Code.

Sec. 49-1001. Air gap for waste pipes.

Indirect waste pipes shall discharge into and above the flood level of an approved receiving fixtures through an air gap.

Sec. 49-1002. Receiving fixtures.

(a) Plumbing fixtures approved for receiving the discharge of indirect waste are floor drains, floor sinks, mop sinks, service sinks or a stand pipe connected to a p-trap installed to receive discharge from indirect waste piping. The fixture or opening shall be of a shape and capacity to prevent splashing or flooding and shall be located where readily accessible for inspection and cleaning.

(b) When a floor drain is used as a receiving fixture, the rim shall be flush with the floor and the strainer recessed one inch below the finished floor.

(c) Receiving fixtures in rooms where food or drink for human consumption are stored, processed or prepared shall be floor sinks, which can be easily cleaned and inspected. Hub drains are not permitted in these areas.

(d) Indirect waste shall not discharge into fixtures used for culinary purposes.

(e) Fixtures, appliances, devices or appurtenances except air conditioning/air distribution equipment units shall be piped independently to the receiving fixture.

(f) The receiving fixture or opening shall be located in the same room as the fixtures, appliances, devices or apparatuses served.

Sec. 49-1003. Indirect waste pipe sizes.

(a) Indirect waste pipes shall not be smaller in diameter than the waste opening of the fixture served.

(b) Pumped indirect waste pipes shall be sized per the fixture manufacturer's recommendations or standard practice for lines under pressure. All waste piping shall be labeled pressure waste.

(c) See section 1004 for indirect waste requirements.

Sec. 49-1004. Indirect waste requirements.

Indirect waste requirements are as follows:

Fixture	Length (feet)	Minimum Size	Waste Indirect	Waste Direct	Receiving Type	Fixture Size
Bar sink	3	1½	X		FS	2
Beer tap (note 1)	5	1	X		FS	2
Cocktail station	10	1	X		FS	2
Cooler	10	1	X		FS	2
Soda dispenser	10	1	X		FS	2
Glass washer (note 2)	5	1½	X		FS	2
Dishwasher, commercial:						
Single rack	3	1½	X		FS	2
Conveyor type	3	2	X		FS	3
Steam table (note 4)	10	1	X		FS	2

Dipper well (note 4)	10	1	X		FS	2
Soup kettles (note 4)	5	1	X		FS	2
Walk-in cooler (note 2)	N/A	1	X		FS/FD	2
Freezer	N/A	1	X		FS/FD	2
Sink (food prep area):						
Single Compartment	3	1½	X		FS	2
Three Compartment	3	2	X		FS	3
See Note 3						
Can washer	5	1½	X		FS/FD	2
Glass filler (note 4)	5	1	X	X	FS	2
Ice bin	10	1	X		FS	2
Ice machine (note 4)	5	1	X		FS/FD	2
Ice cream machine	5	1	X		FS	2
Coffee dispenser	5	1	X		FS	2
Water conditioner (note 4)	20	½	X		FS/FD	2

FD = Floor drain FS = Floor sink

Indirect waste pipe shall be installed with a minimum of one-fourth inch per foot slope.

Note 1: Beer taps shall drain to a floor sink where sufficient water from other fixtures (i.e., bar sink) will flush the wasted beer. If sufficient water is not available, the waste shall be piped as a direct waste see section 49-1006)

Note 2: No floor sink or floor drain shall be located in a walk-in cooler, except in coolers where food is prepared.

Note 3: All fixtures used for culinary purposes in places where food or drink is manufactured, sold or distributed shall be piped as an indirect waste. Exception: Hand sinks and disposals.

Note 4: The following applies.

(a) A maximum of three fixtures on a two-inch (2) floor sink.

(b) A maximum of six fixtures on a three-inch (3) floor sink.

(c) A maximum of one fixture on a two-inch (2) floor sink receiving a single rack dishwasher or a single well sink.

(d) A maximum of two fixtures on a three-inch (3) floor sink receiving a conveyor type dishwasher or a three-compartment sink.

Note 5: When equipment is furnished with a serrated fitting, the flexible connection shall be a maximum of six inches long.

Sec. 49-1005. Chemical wastes.

(a) Any waste piping which can be anticipated to transfer a substance that would cause damage to standard piping materials shall be installed in accordance with this section.

(b) Chemical waste piping shall extend from the outlet of the fixture to the connection to a sanitary main, which has sufficient volume to insure dilution.

(c) If it is not possible to insure adequate dilution to prevent damage to standard materials downstream of the connection to the sanitary main a dilution basin shall be installed before the connection to the main. The dilution basin shall contain absorption or neutralizing material sufficient to decrease the damaging effects of the waste. The dilution basin shall be installed in a readily accessible location.

(d) Chemical waste piping and the associated vent piping shall be constructed of materials listed to safely convey the anticipated waste. Before installing a chemical waste system, a statement from the building occupant listing anticipated chemical wastes and concentrations shall be submitted to the chief plumbing inspector. The

permit applicant shall submit manufacturer's data confirming that the chemical waste system to be installed is compatible with the anticipated chemicals.

(e) Joints, hangers, installation and testing methods shall be as required by the manufacturer of the piping system. Joints of the mechanical type shall be readily accessible

(f) Vents serving chemical waste piping shall not be combined with vents serving other waste piping.

(g) Chemical waste shall only be allowed to discharge into a sanitary waste line connected to the building sanitary drain.

Exception: Insignificant amounts of diluted chemical waste (i.e., cooling tower overflow) may discharge into a storm drainage system connected to a street storm sewer main if a sanitary sewer is not readily accessible.

Sec. 49-1006. Bar and soda waste.

Waste from beer taps, soda beverages, liquor, wine, bar sinks and coffee will be considered a corrosive waste and shall be installed as follows:

(a) Polyethylene and polypropylene plastic pipe and fittings with heat-fusion joints of the socket-fusion type are approved materials for this type of installation. All joints shall be made in accordance with ASTM Standards D 2657 and D 3309.

(b) Schedule 40 or heavier Polyvinyl chloride (PVC) pipe and fitting may be used underground for such waste. All joints shall be made in accordance with ASTM standard D 2855, D2564 and F402.

(c) The vents for any fixture receiving such waste shall be of materials approved in Article VII, Article VIII and Article IX.

(d) Shall run independent of all other waste and connect to another waste or soil line where sufficient water will dilute and flush the corrosive waste.

(e) Only long sweep fittings shall be installed.

(f) Threaded plastic fittings shall not be used underground.

(g) Whenever the pipe passes through a slab on grade concrete floor, it shall have a minimum one-half-inch-thick wrap to allow for adequate free movement due to thermal expansion.

(h) Only approved transition fittings shall be permitted.

(i) Hangers and straps shall be as noted elsewhere in section 49-507

(j) Hangers using threaded rod and adjustable swivel ring or clevis type hangers shall be double-nutted.

(k) If waste is extended through a fire rated floor or partition, other accepted fire stopping materials, techniques and devices may be required.

(l) Floor drains made of plastic shall not be allowed.

Secs. 49-1007--49-1099 Reserved.

ARTICLE XI. INTERCEPTORS

Division 1. General

Sec. 49-1100. Industrial wastes generally.
It shall be unlawful for any factory, stockyard, slaughter house, rendering plant, tannery, or other establishment to make or cause to be made any connection to the sewerage system of the city for the disposal of solid wastes except as herein provided. Any factory, rendering plant, tannery, or any other building or establishment of any kind which handles offal, garbage, filth, or other solid industrial waste, other than domestic sewage, that will not readily disintegrate, or digest in domestic sewage treatment works or plants, and that may collect in sewers or impede the flow of sewage through same or accelerate putrescibility of the sewage, shall, before connecting with any of the city sewers, install interceptors of sufficient size to handle all sewage coming from such places. Said interceptors shall be designed so as to intercept, catch, or collect any and all of the objectionable substance above described and prevent same from entering the city sewers.

Said interceptors shall be provided with sufficient baffles and screens to accomplish the results as described in the preceding paragraph. Before installing such interceptor, a plan or diagram of same shall be submitted to the public works director for approval. The public works director shall approve any interceptor that is adequate to accomplish the results above described.

Sec. 49-1101. Required.
Interceptors for fat, oil, grease, sand and other substance harmful or hazardous to the building drainage systems, the public sewer, sewer treatment processes shall be provided as required in this Article. Exception: Interceptors shall not be required for residential dwellings units, & non-commercial buildings.

Sec. 49-1102. Restricted uses.
Toilets, urinals, lavatory, tubs, shower, and similar fixtures shall not drain through an interceptor.

Division 2. Exterior Grease Interceptor Commercial Kitchens

Sec. 49-1103. Commercial kitchens.
Commercial kitchens shall be defined as establishments such as restaurants that are free standing or restaurants that are constructed as new additions to existing buildings, hotel kitchens, hospitals, school kitchens, bars, factory cafeterias, institutions, care facilities, dances halls, clubs and any establishment that in the preparation of food will produce grease laden waste.

Sec. 49-1104. Required.
All new commercial kitchens shall be equipped with an exterior grease interceptor or an automatic grease removal device serving the grease laden system which includes but is not limited to all floor drains, floor sinks, dishwashers, mop sinks, service sinks, pot sinks, three compartment sinks and can washers located in the food preparation, food dispensing, and ware-washing areas . The discharge from the interceptor shall connect to the building sanitary sewer. Where the building sewer is not accessible the discharge may reenter the building and connect to the building drain when approved by the chief plumbing inspector. Existing commercial kitchens determined by the public works director to be creating a public sewer system maintenance problem shall be required to install an exterior grease interceptor or automatic grease removal device.

All existing commercial kitchen renovations will be required to comply with this section.

Sec. 49-1105. Not required, provisions for future installation.
Establishments that do not cook the food that is served and do not wash equipment or utensils associated with the preparation or service of cooked food will not be required to install an interceptor or automatic grease removal device, however provisions shall be made in the piping of all kitchen plumbing fixtures for the installation of a

exterior grease interceptor or automatic grease removal device, The drains from the kitchen fixtures shall connect to the building drain a minimum of four (4) feet from the exterior of the building and after the two-way cleanouts of the building drain.

Sec. 49-1106. Material requirements.

(a) Concrete with a minimum wall thickness of four (4) inches

(b) Fiberglass reinforced polyester

(c) Polyethylene

The interceptors shall show no leakage from section seams, or the inlet and outlet.

Sec. 49-1107. Structural requirements.

All exterior grease interceptors shall be designed to withstand anticipated loads for both earth and traffic loads.

Sec. 49-1108. Enzymatic units.

All enzymatic type grease interceptors shall be prohibited.

Sec. 49-1109. Exterior grease interceptors.

Exterior grease interceptors shall conform to the following:

(a) It shall be water tight, durable, and constructed of the same materials as referenced in section 49-1106.

(b) The inlet invert shall be at least three (3) inches above the outlet invert.

(c) The inlet sanitary tee shall extend at least twenty-four (24) inches below the liquid level

(d) The outlet sanitary tee shall extend to within eight (8) inches of the tank bottom.

(e) All below ground grease interceptors shall either be two-chambered or individual tanks in series. If two-chambered, the dividing wall shall extend to within (1) foot of the bottom of the tank and within (2) inches of the top. Extended inlet and outlet sanitary tees shall also be provided. Both chambers shall be directly accessible from the surface (minimum 1 foot diameter access opening over both the inlets and outlets) The secondary compartment shall be 1/3 of the capacity of the interceptor. A two-way cleanout shall be provided on the inlet and outlet sides of the interceptor. (See section 49-1109(e))

(f) Waste other than kitchen waste shall not be connected to a grease interceptor.

(g) The effluent from the grease interceptor shall connect to the buildings sewer or the inlet of the septic tank.

(h) Interceptors shall have a minimum capacity shall be 750 gallons and be sized in accordance with sections 49-1112 and 49-1113.

(i) The building drain is extended to the outlet of the grease interceptor.

Sec. 49-1110. Inspection manhole.

(a) An inspection manhole shall be required on the building sewers of all users who are required to have any interceptor with a capacity greater than 1500 gallons. The inspection manhole shall allow for proper inspection, sampling, temperature monitoring and flow measurement of the waste within the building sewer. All building wastewater shall flow through the inspection manhole. Two individual discharge lines, one containing domestic discharge and the other originating from the interceptor, shall discharge separately into the inspection manhole, The purpose for two separate lines is to insure that the interceptor is properly functioning, properly maintained and that no excessive accumulation of grease, oil, and sand is being released to the wastewater collection system.

(b) The inspection manhole shall be installed on the user's premises. The inspection manhole shall be designed to allow traffic loading. All inspection manholes shall be constructed in accordance with plans and specifications of the Public Works Department Standard Plate Number 740.

Sec. 49-1111. Maintained.

(a) All exterior interceptors shall be maintained by the user, owner by a regular maintenance schedule, which shall be performed before the retention capacity of the interceptor, is exceeded. All interceptors shall be pumped a minimum of every 30 days. Pumping frequency may be extended if user can document proposed pumping schedule will adequately prevent excessive accumulation in interceptor.

(b) Grease interceptor cleaning and maintenance shall include pumping the interceptor until empty, and cleaning the side walls and baffle walls. Any broken or damaged pipes shall be immediately restored to their original design. All grease interceptors shall be maintained to continually operate efficiently at all times.

(c) Grease interceptors shall be pumped at a frequency such as to maintain a grease layer of less than six (6) inches on top of the interceptor and a solids layer of less than eight (8) inches on the bottom of the interceptor. No emulsifiers, grease cutters, or other chemicals, which could cause grease to pass through the interceptor, may be used in the maintenance of grease interceptors or drain lines.

(d) No partial pumping or skimming is allowed. No wastewater may be reintroduced into the grease interceptor.

(e) Hot water flushing to clear interceptor is prohibited.

(f) Permitted waste disposal firms registered with the public works director must perform any removal and hauling of the collected materials not performed by owner(s) personnel.

(g) User shall report all spills occurring during collection to the public works director within 24 hours. And shall immediately clean up or cause to be cleaned up all spills of liquid waste and shall have the waste properly disposed of by a transporter.

(h) The user shall allow City personnel ready access at all reasonable times to all parts of the premises for the purpose of inspection, sampling, record examination, or in the performance of any other duties related to the interceptor on the premises. A maintenance/inspection log shall be kept documenting each maintenance activity and each inspection (include date, time, and initial) This log shall be posted in each establishment and made available upon request by the City. User will maintain pumping records on file for (3) years.

Sec. 49-1112. General criteria for sizing grease interceptor.

(a) The grease interceptor capacity for commercial kitchens with seating or beds (including restaurants, cafeterias, hospitals, schools, institution, care facilities, clubs, bars and dance halls) shall be calculated according the following formula:

Size = T.O.R. x C.U.F. x 2.5 x S.C.

Where:

Size = Total volume (in gallons) of the grease interceptor

T.O.R. = Turnover rate which averages two meals (place settings) per table per hour

C.U.F. = Categorical use factor

2.5 = The average water (in gallons) used per place setting

S.C. = Seating capacity in subject facility (or bed usage for care facilities)

(b) The grease interceptor capacity for commercial kitchens without seating or beds (including deli stores with meat cutting, super markets with meat cutting, bakeries and butcher shops) Shall be calculated according to the following formula:

Size = H.O. x C.U.F. x 10

Where:
Size = Total volume (in gallons) of the grease interceptor
H.O. = Number of hours of operation per day
C.U.F. = Categorical use factor

Sec. 49-1113. Specific criteria in determination of grease interceptor size.
Food service categories were devised based on the type of kitchen facilities in use and type of facility.

(a) Category A: Restaurants/Cafeterias with full or limited service with the capability to serve or prepare one hundred or more meals per day.
  (1) Plumbing fixtures: Pot sinks, two or three compartment sinks, hand sinks, mop sinks, floor sinks and one dishwasher.
  (2) Equipment: A minimum of one grill or one fryer and one to three ovens.
  (3) Formula: 2.0 x C.U.F. x 2.5 x seating
  (4) C.U.F. = 1.0
  (5) A value of .25 will be added to the categorical use factor for each additional dishwasher.
  (6) A value of .50 will be added to the categorical use factor for each additional "wok" stove, deep fryer, or grill.

(b) Category B: This category is for hospitals, schools, institutions, and care facilities.
  (1) Formula hospitals/schools: 2.0 x C.U.F. x 2.5 x bed usage or seating where C.U.F. = 0.75.
  (2) Formula Institutions/care facilities: 2.0 x C.U.F. x 2.5 x bed usage or seating where C.U.F. = 1.0.
  (4) A value of .25 will be added to the categorical use factor for each additional dishwasher.
  (5) A value of .50 will be added to the categorical use factor for each additional "wok" stove, deep fryer or grill.

(c) Category C: This category is for clubs bars and dance halls with limited food service facilities.
  (1) Formula: 0.25 x C.U.F. x 2.5 x seating where C.U.F. = 1.0
  (2) A value of .25 will be added to the categorical use factor for each additional dishwasher.
  (3) A value of .50 will be added to the categorical use factor for each additional deep fryer or grill.

(d) Category D: This category encompasses deli stores with meat cutting facilities, supermarkets with meat cutting or bakery capabilities, retail and wholesale bakery facilities, and butcher shops.
  (1) Formula: (Hours of operation) x C.U.F. x 10 where C.U.F. = 4.0.
  (2) For each of the following conditions a factor of .50 is to be added to the C.U.F. value of 4.0 when dealing with meat cutting. More than one floor drain or complete cooking of meats.
  (3) When dealing with retail type bakeries or supermarkets that have bakery facilities in addition to a deli and /or meat cutting, the bakery shall be sized separately using the same formula as above with the deletion of the .50 adjustment for the complete cooking of meats.
  (4) There is an adjustment of an addition of 1.5 to the C.U.F. when dealing with bakeries that are wholesale only or are of the industrial classification.

Sec. 49-1114. Abandonment of an exterior grease interceptor.
Whenever the use of a exterior grease interceptor is discontinued following a "change of use" of the building, condemnation or demolition of a building or property the grease interceptor shall be pumped of any existing liquids and or solids, the top shall be removed and then filled with earth. The earth shall be tamped completely so as to prevent voids, which would occur as the result of settling, or shall be removed after being pumped of existing liquids and or solids. All existing waste lines shall be capped or reconnected to the building sewer. Permits will be required and inspections made of all abandon exterior grease interceptor.

Section 49-1115. Automatic grease removal device standards
All automatic grease Removal Devices shall meet the Plumbing and Drainage Institute Standard PDI G101, ASME A112.14.3 or ASME A112.14.4 and shall be installed in accordance with the manufacturer's instructions.

Sec. 49-1116. When automatic grease removal devices are allowed.
An automatic grease removal devices may be installed in lieu of an exterior grease interceptor.

Sec. 49-1117. Installation of automatic grease removal devices.
Automatic grease removal devices shall be installed as follows:

(a) The maximum rated flow capacity through each device shall not exceed the manufacturer's specifications.

(b) The minimum rated flow capacity shall be 20 gpm for each device.

(c) Each automatic grease removal device shall have a flow control or restricting device that is integral to the device or separate and installed as per the manufacturer's instructions. Flow control devices shall not have adjustable or removable parts and shall be readily accessible.

(d) No food waste disposal unit shall be connected to or discharged into an automatic grease removal device.

(e) An integral or separate food and solids filter shall be installed upstream of all automatic grease removal devices.

(f) Automatic grease removal devices shall be designed and installed so as to automatically, on a time-controlled or event-controlled basis, separate the grease from grease laden waste and then transfer that grease to a separate portable container in which the grease can be transported. All operations of the device, other than maintenance, shall occur without intervention from the user.

(g) Automatic grease removal devices and grease storage containers shall be installed so as to be readily accessible and easily maintained and shall not be installed in food preparation areas or in rooms in which food or food preparation equipment is stored or in rooms which may be entered directly from food preparation or food storage areas. Grease storage containers may not be transported through food preparation areas or rooms in which food or food preparation equipment is stored.

(h) An automatic grease removal device shall not be buried directly in the ground, except that, such a device may be installed in a buried vault. The vault must:

(1) be readily accessible for service.

(2) have a closeable opening large enough to allow for removal and replacement of the device.

(3) be large enough to have a minimum clear space of 24" on all sides of the device.

(4) be located in an area not subject to freezing temperatures or must be provided with a heat source of adequate capacity to allow the device to operate properly.

(5) contain a recessed sump pump which shall discharge into the grease waste system.

Sec. 49-1118. Automatic grease removal device sizing.
The manufacturer's listed maximum flow rate for the automatic grease removal device shall be equal to, or greater than, the maximum possible flow rate of the inlet pipe. To determine the maximum possible flow of the inlet pipe, refer to Table 1118.

TABLE 1118

Diameter of Grease Waste Pipe Inches	Pipe ½ Full Flow (gpm)	Size of Grease Interceptor
2	10	10
3	30	37
4	62	75
5	115	125
6	188	250

Sec. 49-1119 —49-1129 Reserved.

Division 3. Grease Traps

Sec. 49-1130. Standards.
All individual grease traps shall meet the Plumbing and Drainage Institute Standard PDI_G101

Sec. 49-1131. When allowed.
The installation of a grease trap shall not be allowed except where exterior interceptors or automatic grease removal devices cannot be installed.

Sec. 49-1132. Grease traps.
Grease traps shall be installed as follows:

(a) The maximum rated flow capacity through each trap shall be 50 gpm.

(b) The minimum rated flow capacity shall be 20 gpm. for each trap.

(c) Water jacketed grease traps are not approved.

(d) Four separate fixtures shall be the maximum connected to or discharged into any one grease trap.

(e) Flow control devices shall not have adjustable or removable parts. Each fixture connected to a grease trap shall have a flow control or restricting device installed in the drain outlet and shall be readily accessible.

(f) The total capacity in gallons of fixtures discharging into a grease trap shall not exceed 2½ times the gpm flow rate of the grease interceptors.

(g) A grease trap may be used as a fixture trap for a single fixture only when the horizontal distance to the fixture is less than four feet and the vertical distance to the fixture outlet is less than 2½ feet.

(h) No food waste disposal unit shall be connected to or discharged into a grease trap.

(j) Inside grease traps shall be cleaned as often as necessary but not less frequent than at least every 30 days. Cleaning shall consist of removing interceptor contents until empty and cleaning sides and bottom.

Sec. 49-1133. Grease traps sizing.
Grease interceptors sizing shall be as follows:

Total Number of Fixtures	Maximum Rate of Flow (gallons per minute)	Maximum Grease Retention (pounds)
1	20	40
2	25	50
3	35	70
4	55	110

Sec. 49-1134--491139 Reserved

Division 4. Interceptors Flammable.

Sec. 49-1140. Type I sealed interceptors for flammable waste.
Type I sealed interceptors for flammable waste shall meet the following requirements:

(a) Shall be sized as follows:

(1) Up to three (3) 4 inch drains or sixty (60) feet of trench drain shall be connected to a interceptor with a minimum 24 inches inside diameter and shall have a minimum depth below the water level of 24 inches.

(2) Up to eight (8) 4 inch drains or one hundred sixty (160) feet of trench drain shall be connected to a interceptor with a minimum 30 inches in diameter and shall have a minimum depth below the water level of 30 inches.

(3) More than eight (8) 4 inch drains or more than one hundred sixty (160) feet of trench drain shall be connected to a interceptor with a minimum 36 inches in diameter and shall have a minimum depth below the water level of 36 inches.

(b) Shall be cast iron or concrete. Formed concrete 3000 lb. shall have minimum wall thickness of four (4) inches and shall be reinforced. Reinforced concrete pipe may be used meeting ASTM Standard C76

(c) Shall have an airtight cover securely attached to the top of the basin and be designed to withstand traffic loads.

(d) Shall have a minimum trap seal of eight inches and be provided with a full size cleanout.

(e) Shall have a four-inch vent installed independently from the interceptor through the exterior wall no more than a maximum four (4) feet above the interceptor and a minimum of eighteen (18) inches from the ground to the opening. The outlet shall be protected from infiltration by either an approved cover or a return bend at the wall penetration.

(f) Shall have a minimum waste of four inches.

(See figure 1140)

Sec. 49-1141. Type I interceptor required for certain uses.
A Type I interceptor shall be provided as follows:

(a) In all structures or lots where automobiles, other motor vehicles, construction equipment or similar equipment are serviced or repaired.

(b) In all structures or lots where automobiles, other motor vehicles, construction equipment or similar equipment are washed.

(c) In all structures where automobiles, other motor vehicles, construction equipment or similar equipment are parked or stored.

(d) In any structures where vats, tanks, sinks, lavatories, are used for the washing or cleaning of parts for automobile or similar equipment.

Sec. 49-1142. Other drains requiring type I interceptor.
Drains or vats, tanks, sinks, or lavatories for the washing or cleaning of parts shall drain to a type I interceptor. (See figure 1142)

Sec. 49-1143. Type II interceptors for nonflammable waste.
Type II nonflammable interceptors shall be connected as follows:

(a) Shall be at least 24 inches in diameter and 36 inches in depth and shall have a minimum depth below the water level of 24 inches.

(b) Shall be cast-iron or concrete.

(c) Shall have a cover designed to withstand traffic loads.

(d) Shall have a minimum trap seal of eight inches and be provided with a full size cleanout.

(e) Shall have a four-inch vent installed independently from the interceptor through the exterior wall at least seven feet above the interceptor or through the roof.

(f) Shall have a minimum waste of four inches.
(See figure 1143)

Sec. 49-1144. Type III mud and sand interceptors.
Type III mud and sand interceptors shall be connected as follows:

(a) Shall be at least 24 inches wide by 48 inches long by 36 inches in depth.

(b) Shall have a minimum depth below the water level of 24 inches.

(c) Shall have a minimum trap seal of eight inches and be provided with a full size cleanout.

(d) The slotted grate shall be designed to withstand traffic loads.

(e) Shall be cast-iron or concrete a minimum four (4) inches thick.

(f) Shall have a minimum waste of four (4) inches. (See figure 1144)

Sec. 49-1145. Type IV steam and hot water interceptors.
All drains from high pressure blow offs or pump exhausts when connected to a sewer shall be connected as follows:
(a) Shall be connected to an interceptor of suitable size.

(b) Shall be cast-iron or concrete or steel construction .

(c) Shall have a minimum trap seal of six inches.

(d) Shall have a minimum waste of four inches.

(e) Shall have a minimum four-inch vent installed independently from the interceptor through the roof.

(f) Shall have a stainless steel baffles and wear plates.

(g) Shall have an inspection port.

(h) Shall have a tempering assembly with drain fitting, self-contained temperature valve, temperature sensing bulb, bi-metal thermostat and strainer. To maintain a discharge temperature of 140 degrees F. maximum.
(See figure 1145)

Sec. 49-1146. Combination type I and type III interceptor.
A combination of a type I and a type III interceptor may be used with the waste opening from the type III interceptor

entering the sealed type I interceptor four inches above the water level. The connection shall turn down a minimum of 12 inches to form a trap. (See figure 1146)

Sec. 49-1147. Drains in multiple-level public garages.
All drains on the lower levels of a multiple-level garages/parking structures shall be connected to a type I interceptor and run to the sanitary sewer. Drains on the top level of a garage/ parking structures shall be run to the storm sewer system. (See figure 1147)

Sec. 49-1148. Drains receiving animal waste.
(a) Barns and stables.

(1) Drains for barns or stable floors shall be connected to a type II interceptor of suitable size.
(2) Minimum size waste for the interceptor shall be four (4) inch.
(3) Minimum size waste for any floor drains or trench drains shall be four (4) inch.

(b) Veterinary clinics, animal shelters, kennels and pet boarding.
(1) Minimum size for any floor drains or trench drains shall be three (3) inch.

Sec. 49-1149. Multiple car wash bays.
Car washes with multiple bays may use a combination of mud and sand pits and type I interceptors as illustrated in figure 1149 Trench drains shall be at least four inches wide and four inches deep with a cover designed to withstand traffic loads.

Sec. 49-1150. Special wastes.
Sampling manholes may be required. They shall be constructed to meet design approval of the public works department of the city. A plumbing permit shall be required, and the plumbing inspector shall perform inspection.

Sections. 49-1151--49-1199 Reserved.

ARTICLE XII. RAINWATER DRAINAGE

Sec. 49-1200. Required.
(a) Roofs, paved areas, stairwells, courts and courtyards shall be drained into a storm sewer system or daylighted onto the owner's property.

(b) Where a separate storm sewer main is not available, the storm sewer shall be extended separately to a point beyond the property line before combining with the sanitary sewer.

Sec. 49-1201. Prohibited drainage.
Rainwater shall not be drained into a sanitary sewer except as provided in section 49-1205 and such drain shall not be used as soil, waste or vent pipe.

Sec. 49-1202. Materials.
(a) Piping placed within the interior of a building shall conform to Article VIII of this chapter.

(b) Piping located underground and more than four (4) feet outside the exterior wall of a building shall conform to section 49-1732

Sec. 49-1203. Connection of exterior rainwater leader.
An exterior rainwater leader shall connect to the building storm drain or storm sewer a minimum of four (4) inches above finished grade.

Sec. 49-1204. Testing of rainwater leaders.
Rainwater leaders shall be installed, tested, and inspected in the same manner as prescribed for soil and waste stacks, whether connected to the sewer or run to daylight.

Sec. 49-1205. Connections to building drain.
Rainwater drains may be connected to the main building drain in a manner prescribed for other plumbing fixtures and branches, provided the roof drain, canopy drain, court or courtyard drain, or areaway drain does not serve a total area greater than 50 square feet and that the drain is of a size not larger than two inches.

Sec. 49-1206. Roof drains.
Roof drains shall meet the following requirements:

(a) Roof drains shall conform to ANSI A112.21.2 1971.

(b) Strainers for general use shall extend not less than four (4) inches above the surface of the roof immediately adjacent to the drain and have a minimum inlet area 1½ times the inside diameter of the pipe to which the strainer is connected.

(c) Strainers for flat decks, on sun decks, on parking decks, and on similar areas normally serviced and maintained may be of the flat surface type, level with the deck, and shall have an available inlet area not less than two times the area of the pipe to which the strainer is connected.

(d) Roof drain flashing shall conform to section 49-717.

Sec. 49-1207. Vertical wall areas.
Vertical wall areas situated to shed rainwater onto a roof shall be considered in calculating the horizontal area of drainage according to the following:

(a) For one wall: add 50 percent of the wall area to the roof area figures.

(b) For two adjacent walls: add 35 percent of the total wall areas.

(c) For two walls opposite and of the same heights: add no additional area.

(d) For two walls opposite and of differing heights: add 50 percent of wall area above the top of the lower wall.

(e) For walls on three sides: add 50 percent of the area of the inner wall surface below the top of the lowest wall per subsections (b) and (d) of this section.

(f) For walls on four sides (no allowance for wall areas below the top of the lowest wall): add for areas above the top of the lowest wall per subsections (a), (b), (d) and (e) of this section. (See figure 1207)

Sec. 49-1208. Vertical rainwater leaders.
Vertical rainwater leaders having not more than a ten-foot horizontal in an offset below the roof and terminating to daylight above grade shall be sized as follows for projected roof areas in square feet:

TABLE 1208	
Size of Leader	**Maximum Projected Roof Area**
2	960
3	2,930
4	6,130
5	11,530
6	17,995
8	38,660

This table is based upon a maximum rate of rainfall of three inches per hour.

Sec. 49-1209. Horizontal rainwater drains.
The size of a building rainwater piping system shall be sized in accordance with the following table:

TABLE 1209.
MAXIMUM PROJECTED AREA FOR DRAINS OF VARIOUS SLOPES

Pipe Size (Inches)	1/8" Slope (Square feet)	1/4" Slope (Square feet)	1/2" Slope (Square feet)
3	1,096	1,546	2,295
4	2,506	3,533	5,010
5	4,453	6,293	8,900
6	7,133	10,066	13,700
8	15,330	21,733	30,650
10	27,600	38,950	55,200
12	44,400	62,600	88,800
15	72,800	112,000	158,800

This table is based on a maximum rate of rainfall of three inches per hour.

Sec. 49-1210. Overflow drains and scuppers.

(a) Where roof drains are required, overflow drains having the same size as the roof drains or overflow scuppers having three times the size of the roof drains shall be installed. (See figure 1210(a).) See Exceptions**.**

(b) The inlet flow line shall be located two inches above the low point of the roof. (See figure 1210(a).)

(c) Overflow scuppers having three times the size of the roof drains may be installed in adjacent parapet walls with the inlet flow line located a maximum two (2) inches above the low point of the adjacent roof and having a minimum opening height of four (4) inches. (See figures 1210(a), 1210(c))

(d) Overflow drains shall be connected to piping that is independent of the roof drain piping system and shall be discharged to daylight a maximum of 18 inches above grade or connected to the building storm sewer after first passing through an area inlet or manhole with a grated cover within 15 feet of the building.

(e) Exceptions: Roof drain systems using the exceptions shall be discharged to daylight a maximum of 18 inches above grade or connected to the building storm sewer after first passing through an area inlet or manhole with a grated cover within 15 feet of the building.

(1) An overflow roof drain system is not required for a flat style roof if at least one of its sides does not have a parapet wall and if the tapered insulation does not exceed 4" from the inlet of the drain to the top of the perimeter gravel stop. For sizing, use Table 1209.

(2) An overflow roof drain system is not required if the building is higher than 70 feet (approximately five stories) and the size and quantity of roof drains is determined by Table 1210 (an overflow drain system will be required for any roof portions of the same building which are lower than 70 feet).

(3) If the height of the building is over 70 feet (approximately five stories), the overflow drain piping may be connected into the primary roof drain piping at a point no closer than ten feet below the primary drain connection to the vertical stack, provided that a flow sensor is installed in the overflow system which, when engaged, activates an audible alarm to notify the building occupants that the primary roof drain pipe is blocked and water is running through the overflow drain system.

Roof drainage systems in buildings with storm drainage systems that are designed to accommodate the recovery of rainwater for non potable water uses, may be discharged into the rainwater storage system, provided that the storage system is protected against flooding by a system which will adequately direct any excess rainwater to a storm sewer system, combination sewer or daylighted.

Table 1210

MAXIMUM PROJECTED AREA FOR DRAINS FOR SYSTEMS WITHOUT OVERFLOWS

Pipe Size (Inches)	1/8" Slope (Square feet)	1/4" Slope (Square feet)	1/2" Slope (Square feet)
3	548	773	1,147
4	1,253	1,766	2,505
5	2,226	3,146	4,450
6	3,566	5,033	6,850
8	7,665	10,866	15,325
10	13,800	19,475	27,600
12	22,200	31,300	44,400
15	36,400	56,000	79,400

Sec. 49-1211. Roof drainage water not to flow over adjacent property.
Roof drainage water from a building shall not be permitted to flow over public property or adjacent private property.

Sections. 49-1212--49-1299 Reserved.

ARTICLE XIII. VENT AND VENTING

Sec. 49-1300. Materials.
Vent pipes and fittings shall comply with the standards as given elsewhere in this chapter.

Sec. 49-1301. Individual vents required.
The seal of every fixture trap in a plumbing system shall be protected by a properly installed individual vent except as otherwise provided in this chapter.

Sec. 49-1302. Stack vents.
Extend soil or waste stacks vertically as a vent stack from a point three inches above the flood rim of the highest fixture until penetrating the roof.

Sec. 49-1303. Vent stacks.
A vent stack or main vent shall be installed with soil or waste stacks whenever back vents, relief vents, or other branch vents are required on two or more floors. The vent stack shall terminate independently in the open air above the roof of the building or shall be connected with the stack vent as prescribed in section 49-1302 and shall be run downward full size and without any reduction in size and be connected with the soil or waste through, at, or below the lowest horizontal waste branch or with the building drain.

Sec. 49-1304. Vent pipe grade.
All vent and branch vent pipes shall be free from drops and sags. Vents and branch vents shall be sloped a minimum of 1/16 inch per foot and drain back into a soil, waste line.

Sec. 49-1305. Location of vent terminals.
(a) Extension of vent pipes through a roof shall be terminated at least 12 inches above the roof (see (b) (7) for venting for commercial kitchens) and shall increase to a minimum of four inches in diameter. The change in diameter shall be made inside the building at a point at least 12 inches below the roof but not more than 18 inches and shall be properly flashed as provided in section 49-717. (See figure 1305(a))

(b) Soil, waste, or vent stacks shall not terminate as follows:

(1) Directly beneath any door, window, or other ventilating opening of the building or adjacent building nor shall any such vent terminal be within ten feet horizontally of such opening, unless it is at least two (2) feet above the top of such opening.(See figure 1305(b))

(2) Not closer than two (2) feet under any roof gable.

(3) Not closer than two (2) feet to any wall extending above the roof of any flat-roofed building.

(4) Not closer than six (6) feet to any firewall.(See figure 1305(b)(4)

(5) Where the roof is used for any other purpose than weather protection, the extension shall be run at least seven feet above the roof. (See figure 1305(b)(5))

(6) Not through a sidewall. Exception: As provided for interceptors.

(7) Vents for fixtures in a commercial kitchen shall extend one (1) foot above any wall extending above the roof when two or more walls of a building extend above the roof.

Sec. 49-1306. Sizes of stacks in roof.
(a) The total area of the vents through the roof shall be equal to the area of the building drain, provided that in dwelling units:

(1) A three-inch plus a two-inch plus a 1½ inch will be considered equal to a four-inch.

(2) Branch vents may be connected to a single increaser as shown in figure 1306(a)

(b) At least one stack shall be a minimum of three (3) inches in diameter.

Sec. 49-1307. Connection of vent pipe to soil or waste pipe.
Where vent pipes shall connect to a horizontal soil or waste pipe, the vent pipe shall be taken off above the center of such pipe, ahead of the trap being served. Unless prohibited by structural conditions, all vents shall rise vertically to a point not less than three inches above the flood level of the fixture served before off-setting horizontally or before connecting to the branch vent. (See figure 1307.)

Sec. 49-1308. A vent piped in such a manner as to become a waste.

In no case shall vent pipes be so connected that they can become wastes in case of stoppage.

Sec. 49-1309. Vents for water closets and similar fixtures.
All water closets and fixtures similarly set, such as pedestal urinals and flushing rim sinks, shall have a minimum vent of 1½ diameter installed as close as possible to where such openings come through the floor or wall; provided:

(a) That the highest water closet or other fixture on a three (3) inch or larger stack may have a soil branch extended to a distance not to exceed five (5) feet developed length from the center of the stack to the fixture opening at the finished floor or wall line without installing a revent.(See figure 1309)

(b) On all of the highest water closets where it becomes necessary to extend the soil branch beyond the limits set forth in item (a) hereof, and on all water closets below the top closet, a revent shall be provided as close as possible to the fixture opening and in no case shall such revent be more than two (2) feet developed length from the vent opening to the finished floor. (See figure 1309)

Sec. 49-1310. When no vent or revent required.
Venting is not required in the following applications:

(a) A downspout, rainwater leader trap or subsoil sump pit.

(b) A floor drain, mop sink, floor sink, floor urinal, shower or area drain when the waste connection is installed in the horizontal position of a soil or waste line and located three (3) feet downstream of the base of any properly sized soil, waste or vent stack and five (5) feet from any water closet opening; provided that the developed length of the branch conforms to Table A.

TABLE A.
NO VENT REQUIRED

Size	Developed Length
2	0 to 16
3	0 to 24
4	0 to 32
5 and larger	0 to 45

Waste piping may not exceed a single vertical raise of more than 6½ feet. (See figure 1310(b)) Fixtures listed above shall be counted when sizing the vent for the horizontal soil or waste line.

Sec. 49-1311. Special venting floor drains and area drains.
When a single floor drain, mop sink, floor sink, floor urinal, shower or area drain is connected independently to the horizontal soil or waste line and is extended distances greater than Table A in section 49-1310, it shall be vented with a minimum one-half (½) the ID of the pipe, but in no case less than 1½ inches. Distances shall not be greater than allowed in section 49-909.

Sec. 49-1312. Stack venting.
(a) The maximum number of fixture units permitted on a three (3) inch or larger stack above a stack-vented water closet at the topmost branch interval shall not exceed four fixture units.

(b) When two fixtures are installed, they shall be installed as prescribed in section 49-1406

(c) Bathtubs or shower baths may be stack vented when such drains enter the stack at the same level as the stack vented water closet, through a sanitary tee or sanitary cross with a side outlet, and when installed in a three (3) inch or larger vertical stack. The maximum number of fixture units from stack vented fixtures permitted above these fixtures at the topmost branch interval shall not exceed four (4) fixture units. (See 1312(c))

Sec. 49-1313. Dual vents.
Two fixtures of identical purposes located on opposite sides of a wall or partition or adjacent, may be served with one soil, waste or vent pipe. Each fixture branch length shall be within the prescribed distance allowed between the fixture trap and its vent as required by section 49-1406 Where a dual vent is used, the soil, waste and vent pipes shall be sized equivalent to the size of branch required to serve the same two fixtures when individually installed. Exception: Two water closets shall be a minimum two (2) inch vent

Sec. 49-1314. Return vents.
Bar and soda fountain fixtures and island fixtures installed under bars or counters away from a wall shall be installed as follows:

(a) "P" traps shall be placed as close to the fixture as possible. A continuous vent shall be carried from above the flood level of the fixture and extend horizontally to a vent stack or stack vent (See figure 1314(a))
(b) Where the horizontal portion of the vent cannot be run under a bar or counter to a wall, the vent may be run downward to a level above the waste line, at or below the floor, and carried to and connected with a properly sized branch or main vent. The vent shall be run in such a manner as to allow condensation to drain from the vent line (See figure 1314(b) 1,2,3)

(c) Sinks or other fixtures installed in island counters may be wasted to an antisiphon trap provided that the waste is increased one size, the trap is placed as close to the fixture as possible, and a continuous vent is carried above the flood level of the fixture to an approved vent. (See figure 1314(c))

Sec. 49-1315. Relief Vents.
Soil and waste stacks in building having more than 10 branch intervals shall be provided with a relief vent at each tenth interval installed, beginning with the top floor. The size of the relief vent shall be equal to the size of the vent stack to which it is connected. The lower end of each relief vent shall connect to the soil or waste stack through a wye below the horizontal branch serving the floor, and the upper end shall connect to the vent stack through a wye not less than forty-two (42) inches above the floor level. (See figure 1315)

Sec. 49-1316. Offset vents.
In buildings having five or more branch intervals above an offsets in a soil or waste stack less than 45 degrees from the horizontal shall provide a vent for both the stack above and below the offset.

(a) The upper section of the offset shall be vented as a separate stack with the connection being made at the base of the upper section of the soil or waste stack. The vent stack for the upper section shall be sized for the fixture unit above the offset and may then be connected to another vent stack. The size of the vent shall not be less than the diameter of the vent stack or soil and waste stack whichever is the smaller. The lower section may be connected to the upper section if the vent is sized for the total load for both section. (See figure 1316(a))

(b) The lower section of the offset may be vented by installing a relief vent as a vertical continuation of the soil or waste stack or by installing a yoke vent a minimum of two feet below the offset and above the next lower horizontal branch. The vent shall be sized for the fixture unit load for the lower section of the soil or waste stack and carried out independently or connected to the vent stack. (See figure 1316(b)

Sec. 49-1317. Prohibited vent connections.
Vents from fixtures connected to a grease interceptor, blowoff basins, chemical waste or any vent originating from the closed or sealed portion of a garage catch basin shall not be connected to other vent lines. Such vent shall be carried through the roof independently and flashed, or through the sidewall as shown for type I interceptors.

Sec. 49-1318. Fixture vent pipe sizes.
Each individual fixture of the type listed below shall have not less than the following size vent pipes for trap seal protection unless battery venting is used:

Kind of Fixture		Size of Vent Pipe (inches)
Bar sink:		
Residential		1¼
Commercial		ID
Bathtub		1½
Beer taps	(note 1)	1¼
Bidets		1½
Cuspidors		1¼
Dental units		1¼
Disposal:		
Residential		1½
Commercial		1½
Drinking fountain		1¼
Dishwasher:		
Residential		1½
Commercial		ID
Floor drains	(note 2)	1½
Floor sink	(note 2)	1½
Flushing rim sink		1½
Glass washer		1½
Laundry sink		1½
Lavatory (basin)		1¼
Mop sink	(note 2)	1½
Service sinks		1½
Shower stall	(note 2)	1½
Sink:		
Residential		1½
Commercial		1½
Sitz bath		1½
Sump pump		(note 4)
Urinals		1½
Water closet		1½
Wash fountains		1½
Washer, clothes:		
Residential		2
Commercial		(note 3)

Note 1: Beer taps should be run indirect when possible (See section 49-1004)

Note 2: A vent may not be required (See section 49-1310)

Note 3: See section 49-605

Note 4: See section 49-602(h)

ID = Requires an indirect waste.

Fixtures listed in section 49-1310(b) when connected to a soil or waste line or a branch soil or waste line, shall be counted for venting purposes.

Sec. 49-1319. Size of vent piping.
The maximum fixture unit load and maximum length of horizontal and vertical vent piping shall be as follows:

SIZE OF VENT (INCHES)	MAXIMUM NUMBER OF DRAINAGE FIXTURE UNITS	MAXIMUM LENGTH OF VENT (FEET)
1¼	1	45
1½ See Note	8	60
2	18	120
2½	36	180
3	72	212
4	244	300
5	550	390
6	1296	510
8	3500	750

Note 1: (a) A limit of one water closet

(b) A restroom group containing one water closet, one lavatory and one urinal may be vented with a 1½ vent.

Sec. 49-1320. Battery venting.

(a) A horizontal soil branch that is properly sized to receive the discharge of two (2) but not more than a combination of eight (8) floor outlet water closets, and floor outlet urinals, may be vented by a circuit or a loop vent, which shall be taken off in front of the last fixture. (See figure 1320(a))

(b) In addition, lower floor branches which are connected to a vertical stack and which serve more than three (3) such fixtures shall be provided with a relief vent taken off in front of the first fixture connection.(See figure 1320(b)). This relief vent shall not be required if the branch is connected to a horizontal main.

(c) Such circuits, loop or relief vents shall be taken off from the top of the horizontal branch and shall be sized according to section 49-1318 and 49-1319 but not less than one-half (½) of the diameter of the horizontal soil or waste line.

(d) The distances for waste arms shall be five (5) feet from the soil branch to the fixture opening.

(e) The circuit or relief vent shall not receive the discharge of any soil or waste.

(f) Each fixture drain shall connect horizontally to the horizontal branch.

(g) The maximum slope of the horizontal drain shall be one-half (½) inch per foot.

(h) Fixtures may be added to the end of the battery vented fixtures so long as they are part of the restroom group and vented as required (See figure 1320(h))

(i) The entire length of the horizontal soil branch drain shall be uniformly sized .

Sec. 49-1321. Vents for future use.
In all dwelling units with basements, a minimum of one (1) full 1½ inch vent as defined in section 49-1319 will be required in the basement and installed in a manner that such vent cannot be used as a waste.

Sec. 49-1322. Wet venting.
(a) A water closets may be vented through a wet vent when the fixture units do not exceed four (4). The connection for the waste piping shall be within two (2) feet of the opening of the water closet. No water closet shall be wet vented through the waste of a clothes washer (See figure 1322(a))

(b) A water closet and tub may be vented through the waste from a lavatory when all three (3) fixtures are adjacent to each other on the same wall. The connection for the lavatory waste shall be within two (2) feet of the tub trap (See figure 1322(b))

Sec. 49-1323. Revent.
When a fixture requires a revent it shall be as close as possible to the fixture opening and in no case shall the revent be more than two (2) feet developed length from the fixture opening.

Sec. 49-1324. Vents for waste interceptors.
(a) If the branch line to the interceptors is less than ten (10) feet from the main building drain line, no vent will be required.

(b) If the branch line exceeds ten (10) feet, a two-inch vent shall be required.

(c) Vents for fixtures in a commercial kitchen shall not be connected to vents for non-kitchen fixtures.

Sec. 49-1325 Air admittance valves.
Vent systems utilizing air admittance valves shall be prohibited.

Sections 49-1326—49-1399 Reserved.

ARTICLE XIV. TRAPS AND CLEANOUTS

Division 1. Traps

Sec. 49-1400. Fixtures to be separately trapped; exceptions.
Each and every plumbing fixture, except as follows, shall be separately trapped by a water seal P-trap, placed as close to the fixture outlet as possible.

(a) A two or three-compartment sink may be installed on one trap when one compartment is not more than six inches deeper than the other and the waste outlets are not more than 30 inches apart.

(b) Where it is not practical to install a return vent on a drinking fountain, lavatory, or sink placed away from the sidewalls, a properly vented trap may be placed below the finished floor in a readily accessible location.(See figure 1400(b))

(c) Interceptors, rainwater leaders, and special wastes shall be trapped as otherwise provided for in this Code.

Sec. 49-1401. Trap seals.
Every trap, except catch basins and similar intercepting traps, shall have a water seal of not less than two (2) inches and not more than four inches.

Sec. 49-1402. Trap installation.
All traps shall be set true with respect to their water seals and protected from freezing.

Sec. 49-1403. Prohibited traps.
The following traps are prohibited:
(a) Any trap which depends on the action of moveable parts to maintain the seal.
(b) Any trap with partitions when it is not a part of the fixture.
(c) Building traps shall not be installed.
(d) No S-traps shall be installed except for repair of existing trap.
(e) No new crown vented traps shall be installed except for repair of existing crown vented traps.

Sec. 49-1404. Double traps.
No fixture shall be double trapped.

Sec. 49-1405. Antisiphon traps.
Antisiphon traps shall conform to figure 1405. A food waste grinders (garbage disposal) shall not be connected to an antisiphon trap.

Sec. 49-1406. Distance of vent pipe to trap.
The vent pipe opening from soil or waste pipe, except water closets or similar fixtures, shall not be below the weir of the trap.

No trap shall be placed more than the maximum horizontal developed length from the center of the vertical vent pipe to the weir of the trap as shown in Table 1406.

Table 1406

Size of Fixture Drain (in) Maximum Slope 1/4 inch per foot	Maximum Distance Trap to Vent			
	Sanitary Tee		Y and 1/8 Comb.	
	Feet	Inches	Feet	Inches
1¼	5	0	2	6
1½	5	0	3	6
2	5	0	5	0
3	6	0	6	0
4 inch and larger	10	0	10	0

Note: This distance shall not apply to water closets or similar fixtures.

(a) A sanitary cross may be used as follows:

(1) When two fixtures served by a 1½ or 2 inch sanitary cross are directly back to back and the distance from the center of the cross to the connection of the trap is four inches or less on a 1 ½ inch sanitary cross or six inches or less on a two-inch sanitary cross with no fittings. Exception: The two fixtures cannot be bathtubs or showers.
(See figure 1406(a))

(2) A 3 inch by 1½ inch, 3 inch by 2 inch, 4 inch by 1½ inch, or 4 inch by 2-inch sanitary cross may be used when there is a cleanout on the 3 inch or 4 inch stack that will allow cleaning of the cross from above or below.

(3) A sanitary cross may be used for back-to-back water closets.

(b) A double combination wye and eighth bend fitting may be used when the horizontal waste arms do not exceed Table 1406.(See figure 1406(b))

Sec. 49-1407. Distance of trap from fixture.
The vertical distance from the fixture outlet to the trap weir shall be as close as practical, but in no case over 24 inches (See figure 1407)

Sec. 49-1408. Running traps.
A running trap may be used provided that a cleanout is installed on the inlet and outlet (except two (2) inch where a cleanout is installed on the inlet only). The cleanouts shall be accessible. If the trap is installed more than twelve inches below grade the trap shall be installed in a pit. The pit shall be a size that allows access to the cleanouts.

Secs.49-1409--49-1419 Reserved.

Division 2. Cleanouts

Sec. 49-1420. Building drain cleanouts.

(a) Install a cleanout at the upper terminal of each horizontal drainage pipe. Locate the cleanout a minimum of thirty (30) inches above the finished floor, provided, that on horizontal branch piping of fifty (50) feet or less in length the fixture outlet may be termed a cleanout provided the waste opening meets table 2-3. Exception: A minimum height for a cleanout installed directly behind a water closet shall be forty-two (42) inches from the finished floor.

(b) An approved cleanout shall be placed thirty (30) inches above the floor at the base of all soil, waste and vent stacks.

(c) Install cleanouts at 100 feet on center in runs of piping which exceed 100 feet in length. Except on waste smaller than three inches cleanouts shall be 50 feet on center.

(d) Install a cleanout so that it opens at right angles to or in the direction of the flow of the soil or waste. Except in the case of "wye" branch and end-of-line cleanouts, each cleanout shall be installed vertically above the flow line of the pipe.

(e) Extensions serving cleanouts shall be considered as drainage piping. Each 90-degree cleanout extension shall be extended from a wye fitting or other approved fitting with equivalent sweep.

(f) Cleanouts for interceptors shall be installed outside the interceptor.

(g) Unless installed under an approved cover plate, cleanouts shall be installed above grade, readily accessible, and located to serve the purpose for which they are intended. Clearance requirements for service shall also apply to cleanouts installed under an approved cover plate.

(h) Piping two inches in diameter and less shall have cleanouts installed to provide at least 12 inches of horizontal service space in front of the cleanout.

(i) Piping over two inches in diameter shall have cleanouts installed to provide at least 18 inches of horizontal service space in front of the cleanout.

(j) Regardless of pipe size, cleanouts shall be installed to provide at least 30 inches of vertical service space.

(k) Cleanouts shall be directly accessible from a finished, service or storage space without the use of

extraordinary equipment. However, cleanouts in dwelling units may be located within 20 feet of an access door or trap door.

(l) Cleanouts shall not be smaller than the requirements of Table A-1420.

(m) All cleanouts except in dwelling units, townhouses and apartments shall be labeled for easy identification, i.e., sanitary, storm, lab waste, chemical waste, etc., in a manner which would resist wear.

TABLE A-1420. CLEANOUTS

Size of Pipe (inches)	Size of Cleanout (inches)	Threads Per inch
1-1/2	1-1/2	11-1/2
2	1-1/2	11-1/2
2-1/2	2-1/2	8
3	2-1/2	8
4 and larger	3-1/2	8

Sec. 49-1421. Building sewer cleanouts.

(a) Install an approved two-way cleanout outside the building at the lower end of the building drain and extended to grade at a serviceable location. The cleanouts shall have a concrete pad that measures 18 inches by 18 inches. Exception are as follows:

(1) Dwellings and townhouses will not require such a cleanout if the developed length from the first three (3) inch or larger cleanout inside the building to the wye connection to the city main is 120 feet or less.

(2) When the building main extends outside the building to a manhole that is fifty (50) feet or less from the building and has a minimum inside diameter of forty-eight inches. If the manhole has more than one inlet, the minimum inside diameter shall be fifty-four (54) inches

(3) Additional building sewer cleanouts shall be installed at intervals not to exceed 150 feet developed length in straight runs.

(b) All sewers shall be installed as straight as possible. Every single change of direction in the horizontal plane in excess of 45 degrees in a building sewer shall be served by a cleanout, (Any combination of fittings installed closer than three feet center-to-center shall be counted as the aggregate total degrees of those fittings.) The cleanout requirements of building drains shall apply for building sewers that are located under buildings.

(c) Each cleanout shall be installed so that it opens in the same direction with the flow of the soil or waste or at right angles thereto, and, except in the case of wye branch and end-of-line cleanouts, vertically above the flow of the pipe.

(d) Cleanouts shall be made accessible by yard boxes, or centered in an 18-inch concrete pad flush with the paving or ground with approved materials, and be adequately protected.

(e) Approved manholes may be installed in lieu of cleanouts. The maximum distance between manholes shall not exceed 300 feet. Manholes shall have an inside diameter of at least forty-eight (48) inches. Manholes having more than one (1) inlet shall have an inside diameter of at least fifty-four (54) inches.

(f) Any single change of direction of 90 degrees or more shall require an approved cleanout or manhole.

Sec. 49-1422. Rainwater leader cleanouts.

(a) Rainwater leaders that are run inside the building and connected to a building storm drain shall have the same cleanout requirement as those for soil and waste (See section 49-1420). Exception: When a vertical rainwater leader penetrates the outside wall and daylights above grade, no cleanout is required.

(b) A manhole or area inlet shall be installed on all building storm drains ten (10) inches and larger. The manhole or area inlet shall be installed outside of the building within fifteen (15) feet of the building. This manhole or area inlet is to serve as a cleanout and a relief. The manhole shall have an inside diameter of at least forty-eight (48) inches. Manholes having more than one (1) inlet shall have an inside diameter of at least fifty-four (54) inches. Area inlets shall have a minimum size of two (2) feet wide by four (4) feet long by three (3) feet deep.

(c) On all building storm drains smaller than ten inches, a double cleanout shall be installed. The cleanout shall be installed at the end of the building storm drain

(d) Building storm drains that daylight one hundred (100) feet or less from the building shall not require a cleanout, manhole or area inlet.

Secs. 49-1423--49-1499. Reserved.

ARTICLE XV. WATER SUPPLY AND DISTRIBUTION

Sec. 49-1500. Quality of water.

All buildings intended for occupancy shall be provided with potable water.

Sec. 49-1501. Nonpotable water.

(a) Nonpotable water may be used for flushing of water closets or urinals, and other purposes not requiring potable water.

(b) Nonpotable water shall not be accessible for drinking or culinary purposes.

(c) All piping conveying nonpotable water shall be adequately identified by a distinctive yellow paint or labeled at no more than 20 feet on center with a yellow label with black letters reading "Nonpotable Water" and showing direction of flow.

(d) Nonpotable water shall not be cross-connected with any potable water system.

(e) Outlets served by nonpotable water supplies, which are not connected, to appliances or fixtures shall be labeled with a yellow tag with black letters reading "Nonpotable Water. Not for Human Consumption."

Sec. 49-1502. Cross-connections generally.

(a) Potable water supply from Metropolitan Utilities District water mains shall not be cross-connected with any well or other source of water, either potable or nonpotable.

(b) No installation of a potable water hot or cold piping system shall be arranged, connected, or installed to allow back siphonage by suction, gravity, back pressure or any other cause.

(c) No plumbing fixture or device shall be installed or maintained that does not provide an approved backflow protection device or a minimum air gap. Exception: Water heater, water conditioner.

Sec. 49-1503. Standards for devices to control cross-connections.

(a) Air gap: ANSI A40.4. To be considered an air gap potable and nonpotable water shall be separated by a

vertical distance between the supply pipe and the flood level rim at least two times the diameter of the supply pipe, but never less than one inch. Air gaps can be used on direct or inlet connections and for equipment containing toxic substances.

(b) Atmospheric vacuum breakers (AVB): ASSE 1001, ANSI A112.1.1. The installation of atmospheric vacuum breakers is subject to the following:

(1) Cannot be used under continuous pressure.

(2) Shall be installed on the discharge side of the last control valve.

(3) Shall not be subjected to any backpressure.

(4) Shall be installed above the usage point a minimum of 12 inches.

(c) Hose connection vacuum breakers: ASSE 1011. Outlets with hose threads shall be equipped to protect the potable water system from contamination. Valve outlets, hose bibs, sill cocks or fixtures with hose attachments which may constitute a cross connection shall be equipped with a tamper-proof vacuum breaker. Sill cocks shall be equipped with an integral vacuum breaker conforming to ANSI Standard 1019. Exception: Hose bibs dedicated for residential clothes washers and the drain on a water heater.

(d) Pressure type vacuum breakers (PVB): ASSE 1020. The installation of pressure type vacuum breakers is subject to the following:

(1) Shall be installed a minimum of 12 inches above the usage point and a maximum of five (5) feet above the floor or surrounding ground as measured to the lowest tests ports.

(2) May be installed where subject to continuous supply pressure.

(3) Shall not be installed inside a building.

(e) Backflow preventers with intermediate atmospheric vents: ASSE 1012.

(f) Double check valve type back pressure backflow preventers: ASSE 1015.

(g) Reduced pressure principle backflow preventers: ASSE 1013. Reduced pressure principle backflow preventers may be used on all direct connections subject to backpressure or back-siphonage.

(h) Dual check valve: ASSE 1024 shall not be used for backflow protection.

Sec. 49-1504. Testing of new and existing backflow prevention devices.
All backflow prevention devices with test ports shall be tested upon installation, when repaired, and a minimum of once a year or more often as required by the water purveyor or chief plumbing inspector. The chief plumbing inspector shall, on a monthly basis, notify the Metropolitan Utilities District or other water purveyors of permits issued for the installation or replacement of all testable backflow preventors.

Sec. 49-1505. Maintenance and inspection of backflow prevention devices.
It shall be the responsibility of the building owner to maintain all backflow prevention devices.

(a) Installation and repair.

(1) Only a master plumbers or journeyman plumbers who have been certified through classes approved by the Nebraska Department of Health and employed by a master plumber shall install, maintain and repair such devices. Exception: As noted below and as noted in subsection (b)(1)(ii) of this section.

(i) Certified fire suppression specialist that have been certified through classes approved by the Nebraska Department of Health shall install, maintain and repair only reduced pressure principle backflow preventers and double check valves installed on a fire suppression system.

(b) Testing.

(1) Reduced pressure principle and double check devices.

(ii) Employees of the Metropolitan Utilities District or employees of a water purveyor that have been certified through classes approved by the Nebraska Department of Health may do testing of any testable backflow prevention devices installed in any water system served by the water purveyor Exception: See subsection (iii).

(ii) Master plumbers or journeymen plumbers that have been certified through classes approved by the Nebraska Department of Health and employed by a master plumber.

(iii) Certified fire suppression specialist that have been certified through classes approved by the Nebraska Department of Health shall test only reduced pressure principle backflow preventers and double check valves installed on a fire suppression system.

(2) Pressure vacuum breakers. Master plumbers or journeymen plumbers that have been certified through classes approved by the Nebraska Department of Health and employed by a master plumber. Exception: Pressure vacuum breakers installed on residential lawn sprinkler systems may be tested by a licensed lawn sprinkler contractor that has been certified.

(c) The chief plumbing inspector shall notify the Metropolitan Utilities District or other water purveyors and request that the water service be denied or discontinued at any premises where any of the following exist:

(1) Any backflow prevention device required by Chapter 49 of this Code or the water purveyor's regulations is not installed or maintained in an acceptable manner.

(2) It is found that a backflow prevention device has been removed or by-passed.

(3) Entry is denied to determine compliance with Chapter 49 of this Code or the water purveyor's regulations.

Sec. 49-1506. Location of reduced pressure principle backflow devices and double check assemblies.
The installation of backflow assemblies is subject to the following:

(a) Shall be installed in accordance with the manufacturer's instructions, but in no case shall the device be installed with less than one foot in front of the test ports.

(b) There shall be a clear space for servicing and testing as follows:

(1) For sizes from ¼ inch thru 1½ inches the space shall be 30 inches by 30 inches by 6 foot height.

(2) For sizes from 2 inches thru 3 inches the space shall be 36 inches by 36 inches by 6 foot in height.

(3) For sizes larger than 3 inches the space shall be the length of the backflow assembly plus one (1) foot by 48 inches by 6 foot 6 inches in height.

(c) Mounting height shall be one (1) foot minimum clearance from the ground, floor or platform to the bottom of

the device and five (5) feet maximum from the ground, floor or platform to the outlet of the highest tests ports of the backflow preventer.

(d) When connected to a Metropolitan Utilities District main, shall not be installed in a pit unless approved by the Metropolitan Utilities District.

(e) When connected to a potable well, shall not be installed in a pit unless approved by the plumbing board.

(f) If a bypass is installed around the assembly the bypass shall incorporate an additional backflow preventer of a like type .

Sec. 49-1507. Fire suppression systems.

(a) A double check valve of an approved type shall be installed on all proposed fire suppression systems not utilizing antifreeze.

(b) Fire suppression systems requiring an antifreeze solution shall use a pharmaceutical grade antifreeze. A certification identifying the type of pharmaceutical grade antifreeze used shall be posted near the double check valve.

(c) Existing fire suppression systems shall be inspected by a certified fire suppression specialist to determine whether pharmaceutical grade antifreeze has been utilized. This shall be done at the expense of the consumer. If it cannot be certified that only pharmaceutical grade antifreeze has been used, then at the expense of the consumer a reduced pressure principle backflow prevention device shall be installed.

Sec. 49-1508. Drains for backflow preventer.

The size of drain needed depends on the size of the backflow preventer serviced: sizes one inch and less require a two-inch drain; sizes larger than one inch through three inch shall require a three-inch drain; sizes four inch and larger shall be a minimum four inch drain. On new construction, drains shall be located immediately adjacent to the device, but in no case more than five (5) feet from the device. For existing systems, backflow preventers shall be installed as close as possible to a floor drain with adequate surge protection.

Sec. 49-1509. Master backflow preventers.

(a) Installation of a master backflow preventer (MBFP) shall be subject to the following:

(1) The master backflow preventer must be installed between the meter and the first branch or fixture, appurtenance and appliance take-off. Only a reduced pressure principle backflow device shall be used as a master backflow preventer. Exception A branch isolated by a branch backflow preventer serving a lawn sprinkler system may be installed before the master backflow preventer.

(b) A master backflow preventer shall be installed at the following types of facilities:

(1) Facilities with secondary or auxiliary water systems.

(2) Hospitals, clinics, nursing homes or medical buildings.

(3) Any commercial or industrial facilities which the chief plumbing inspector or the water purveyor may determine to be a potential cross-connection hazard.

(4) Sewage treatment plants or pumping stations.

When a water heating device is installed downstream of a backflow prevention device refer to Article XVI, Section 49-1608

Sec. 49-1510. Private wells.

(a) No well shall be drilled or maintained on any property that is adjacent to a public water supply without the approval of the plumbing board and the Douglas County health department.

(b) No well shall be drilled or maintained on any property for supplying water features or non-potable use without the approval of the Douglas County Health Department.

(c) No wells shall be cross-connected with any other supplies of water.

(d) All wells except those used for single-family residences shall be protected with a reduced pressure principle backflow preventer.

Sec. 49-1511. Device selection table.

The preferred method of backflow prevention shall be an air gap as defined by section 49-1503. Examples of recommended application for various fixtures and appliances are included in the following table.

This table does not contain all fixtures or devices required to have such protection.

	Type of Device to be Used				
Type of Connection	**AG**	**AVB**	**PVB**	**DCV**	**RPBP**
Air washers					X
Air compressors (water cooled)					X
Autopsy Tables					X
Aspirators, medical					X
Aspirators, weedicide					X
Autoclave and sterilizer		X			
Boiler feed line					X
Baptismal font		X			
Bathtub below rim filler		X			
Bedpan Washer, flushing rim		X			
Bidet		X			
Brine tank		X			
Bottle washer		X			
Car wash installation					X
Chemical feeder tank					X
Chlorinator					X
Coffee urn		X			
Cuspidor, dental		X			
Chiller tanks					X
Cooking kettle					X
Cooling towers					X
Condensate tank					X
Detergent dispenser					X
Demineralized system					X
Degreasing equipment					X
Dye vats and tanks					X
Developing tanks		X	X		
Etching tanks					X
Fountain, ornamental		X			X
Garbage can washer					X
Garbage disposers		X			
Greenhouses					X

Hydrotherapy baths		X	X		
Humidifier tank and boxes		X	X		
Hose faucets		X			
Ice maker		X			
Lab equipment					X
Laundry machine		X	X		
Pump prime line					X
Photo lab sinks		X			
Photostat equipment		X			
Pipette washer			X		
Process heat exchangers					X
Steam cleaner					X
Steam tables					X
Stills					X
Starch tanks					X
Sitz bath		X			
Sprinkler system (fire)				X	X
Sprinkler system (residential lawn)			X		
Sprinkler system (commercial lawn)					X
Shampoo basin (beauty shop)		X			
Serrated faucets		X			
Solution tank					X
Swimming pool		X			X
Potato peeler		X			
Ultrasonic baths		X			
Vats					X
Water closets, tank type			X	X	
Water closets, flush valve			X	X	
Water treatment tanks	X				X
Wash tanks		X			
Urinal, siphon- jet, blow-out	X		X		
Urinal, trough		X	X		

AG = Air gap
AVB = Atmospheric vacuum breaker
PVB = Pressure vacuum breaker
DCV = Double check valve
RPBP = Reduced pressure backflow preventer
Note 1: All heat exchangers shall be double wall.

Sec. 49-1512. Protection against freezing.
All water pipes, tanks, appliances, and devices shall be effectively protected against freezing.

Sec. 49-1513. Cleaning and sterilization.
The potable water supply system shall be cleaned and flushed before being put into service.

Sec. 49-1514. Used water return.
Water used for the cooling of equipment or other processes shall not be returned to a potable water system.

Sec. 49-1515. Water hammer.
A water hammer arrestor shall be installed where quick-closing valves are used, shall be located close to the valve and shall be accessible. The water hammer arrestor shall conform to ASME/ANSI A112.26.1 or ASSE 1010.

Sec. 49-1516. Meters.

(a) All water meters installed within buildings shall be in a horizontal position, at a height where they may be easily read, and as near as possible to the point where the water service enters the building and shall be a minimum ¾ inch meter.

(b) The meter one (1) inch and smaller shall be sized in accordance with the following:

Table 1516 (b)	
Meter Size	**Maximum GPM**
5/8	10
3/4	15
1	26

(c) On services larger than one inch and connected to Metropolitan Utilities District the meter size will be determined by the District. All other meters use the following table.

Table 1516(c)		
Meter Flow Gallons Per Minute		
Meter Size		Continuous
1 1/2 disc		50
2 disc		80
3 in comp		160
4 in comp		250
2 in turbo		160
3 in turbo		350
4 in turbo		1000
6 in turbo		2000

(d) Meters of 1½ inches and larger

(1) Shall be set level and in a horizontal position not more than 24 inches high.

(2) There shall be at least an 18-inch clearance above and 18 inches from any wall.

(3) There shall be clear space for servicing and testing in front of the meter 30 inches by 30 inches by 6 foot in height.

(4) Meters shall not be suspended nor supported by the piping.

(5) There shall be an adequate floor drain, sump pump or access to the outside close enough to the test tee to reach with fifty (50) feet of hose to dispose of water from meter testing. The following table shall be used to size the floor drain and/or sump pumps required.

Table 1516(d) Volumes of Water Used in Testing Water Meters	
1½ inch meter	50 gallons per minute
2-inch meter	80 gallons per minute
3-inch meter	150 gallons per minute
4-inch and 6-inch meters	200 gallons per minute
8-inch and larger meters	400 gallons per minute

(e) The maximum pressure (head) loss shall be 15 pounds.

Sec. 49-1517. Meter bypass.

(a) Bypass lines for emergency service shall be installed around meters 1½ inches in diameter and larger except for meters used exclusively for lawn sprinkling systems.

(b) Bypass lines around meters 1½ inches in diameter and larger must be either metered or locked and sealed to prevent accidental usage.

(c) Bypass lines must be designed, valved and installed in accordance with the Metropolitan Utilities District specifications.

Sec. 49-1518. Water service.

A water service line is the piping and related appurtenances installed from the water purveyor's water main to the outlet connection of the first shut-off device downstream of the meter or meters or the first shut-off device inside of the building, whichever is farther downstream. On services where a bypass around the meter is required the bypass is considered part of the service. When the service is used for fire protection the service is from the main to the outlet of the backflow preventers.

(a) All residential service line shall be properly sized for the required demand, but shall be not less than one (1) inch inside diameter. Repair of an existing ¾ inch service will be allowed.

(b) Commercial, industrial and fire service lines shall be properly sized for the required demand, but shall be no smaller than as specified for a residential service.

(c) All water services three-quarters inch through 1¼ inches shall be type K copper, except that portion of the service from the first valve inside the building to the first valve downstream of the meter which shall be Type K, L, or M copper tubing.

(d) All water services 1½ inches and larger shall be class 52 or heavier ductile iron water main, red brass or type K copper.

(e) All joints on copper water services larger than one inch shall be hard solder (brazed) or flared.

(f) Water services for new or remodeled buildings shall be sized to meet the water fixture unit requirements.

(g) All water services shall meet any other requirements of the Metropolitan Utilities District (MUD).

(h) A private fire service main or a combination domestic water service line and fire service line, and their appurtenances, shall be installed according to Metropolitan Utilities District water rules and regulations, ANSI/AWWA Standard C600-87, NFPA 24 and as required elsewhere in this chapter

Sec. 49-1519. Valve before the meter.

(a) On a one (1) inch service or less, a minimum 400-pound ball valve shall be used.

(b) On a 1¼ inch or larger service, a gate valve rated at 200 pounds or greater shall be used.

Sec. 49-1520. Pressure reducing valve.
The installation of pressure reducing valves is subject to the following:

(a) Valves shall be installed in all buildings where the inlet pressure exceeds 80 psi.

(b) The maximum setting when fully adjusted shall be 80 psi.

(c) Pressure reducing valves with thermal bypass shall meet ANSI Standard 1003 and shall be installed in the cold water line on the main side of the meter.

(d) Exception: Systems designed by a registered mechanical engineer for special applications may exceed 80 psig, but in no case shall it exceed 125 pounds, in commercial buildings, to accommodate equipment requirements. In no case shall the high pressure line serve a water heater unless designed by a registered mechanical engineer for special applications.

Sec. 49-1521. Minimum design standard.
All water supply systems except where noted in section 49-1523 and systems designed by a registered mechanical engineer shall meet the following minimum design standards under conditions of peak demand:
(a) Pipe size based on a maximum 6 pounds pressure drop in 100 feet.

(b) Velocity shall not exceed five (5) feet per second (fps)

(c) Maximum fixture units based on section 49-1524.

(d) Water meter pressure drop of not more than 15 psig.

(e) Residual pressure at fixture:
(1) Flush tank -- 15 psig.
(2) Flush valve -- 25 psig.
(3) Other fixtures -- 8 psig.

A water pressure booster system shall be installed whenever the main pressure is insufficient to provide residual pressure at a fixture outlet. See section 49-1524.
See APPENDIX O for design charts.

Sec. 49-1522. Equivalent fixture units.
Equivalent fixture units shall be as provided in the following table:

TABLE 1522
(Includes combined hot and cold water demand.)
Fixture Units Minimum Connection

	Fixture Units		**Minimum Connection**	
Kind of Fixture	Private	Public	Cold	Hot
Bar sink:				
Residential	1		½	½
Commercial		2	½	½
Bathtub (with or without shower over)	2	4	½	½

Bidets	2	4	½	½
Cuspidors		1	⅜	
Disposal	N/R	6	½	
Drinking fountain	1	2	⅜	
Dishwasher	2	4		½
Flushing rim sink		10	1	
Glass washer		2		½
Hose bib or sill cock (standard type)	3	5	½	½
Laundry sink	2	4	½	½
Lawn sprinkler, each head	1	1		
Lavatory (basin)	1	2	⅜	⅜
Mop sink	2	4	½	½
Service sinks	2	4	½	½
Shower (each head)	2	4	½	½
Shower (with more than 3 heads)	10	10	¾	¾
Sink--residential	2	4	½	½
Sink--commercial 3-compartment		4	½	½
Sitz bath	2	4	½	½
Shampoo sink		2	⅜	⅜
Urinals				
Floor urinal		10	¾	
Pedestal urinals		10	1	
Blowout		10	1	
Wash down		10	¾	
With flush tank		3	½	
Wash fountains:				
Circular		4	½	½
Multiple faucet (each set of faucets)		2	½	½
Washers, clothes (each pair of faucets)	2	2	½	½
Washers, clothes, commercial (note 1)				
Water closet:				
Flush tank	3	5	⅜	
Flush valve	10	10	1	
Whirlpool bathtubs (note 3)			¾	¾

Water supply outlets for items not listed above shall be computed at their maximum demand, but in no case less than:

Fixture Units		
	Private	Public
3/8 inch	1	2
1/2 inch	2	4
3/4 inch	3	6
1 inch	6	10

Note 1: Commercial clothes washers, if connected directly by means of rigid piping, shall be assigned a fixture unit value by the size of the inlet on the machine.

Note 2: When sizing a system for dwelling units and townhouses, which include a lawn sprinkling system, sill cocks may be excluded. When a system includes multiple sill cocks, only fifty percent of them need to be used for sizing the demand.

Note 3: All whirlpool bathtubs with a manufacturer's rating of 40 gallons or more.

Sec. 49-1523. Water pipe sizing for dwelling units and townhouses.

(a) Dwellings and townhouses with up to 40 fixture units shall be served by a three-quarters-inch cold water supply from the water meter to the water heater. The hot and cold water supply from the water heater shall be no less than three-fourths inch to each one-half-inch branch. A maximum of nine fixture units shall be permitted on any one-half-inch hot or cold water line. In no case shall there be more than one water closet on a one-half-inch cold line.

(b) No more than 40 fixture units shall be allowed on any three-quarters-inch hot or cold water line.

(c) Dwelling units and townhouses with more than 40 but less than 50 fixture units shall be provided with a one-inch ID cold water supply from the water meter to the water heater. The hot and cold water supply from water heater shall be one inch until the fixture unit load is reduced to the provisions of paragraphs (a) and (b).

(d) Dwelling units and townhouses that exceed 50 fixture units shall be sized according to water Table 1524 or by a registered mechanical engineer.

(e) In existing dwelling units and townhouses where the water pipe is being replaced from the meter to the fixture connection or at a point below the floor, the pipe sizing shall also conform to the above.

Sec. 49-1524. Water pipe sizing for commercial buildings.

(a) All water pipe sizing for commercial and multi-family units and single family units over 50 water fixtures units shall be sized by the use of Table 1524.

(b) A piping system designed by a registered mechanical engineer may use an alternative method of sizing.

TABLE 1524
Water Pipe Sizing Commercial

Pipe Size	Flow (gpm) 5 fps	Maximum Fixture Units Flush Tanks	Maximum Fixture Units Flush Valves	Friction Loss (psi/100 ft)
½	1.3	3.5	0	4.5
¾	3.9	7	0	5.0
1	8.5	15	0	5.0
1-1/4	14.0	28	10	4.9
1-1/2	23.0	53	45	5.0
2	49.0	125	48	5.0
3	140	500	450	5.0

Sections. 49-1525--49-1599. Reserved.

ARTICLE XVI. WATER HEATER

Sec. 49-1600. Permit and inspection.
A permit and inspection is required for any new or replacement water heater.

Sec. 49-1601. Water heaters.
Every water heater shall be sized to provide the hot water requirements of the daily and hourly peak loads of the occupants of the building. For water heaters installed in a building which contains more than one dwelling unit, see section 49-1602.

Sec. 49-1602. Water heaters temperatures setting.
All water heaters installed in buildings, which contain more than one dwelling unit or guest room, or nursing facilities, or other care facilities shall have the temperature setting not to exceed 120 degrees Fahrenheit. Exception shall be made for water heaters used exclusively for laundry facilities.

Sec. 49-1603. Pressure rating.
All water heater and water storage tanks shall be rated for a minimum working pressure of 125 psi.

Sec. 49-1604. Relief valves required; settings.
Every water heater or storage tank shall be protected with a temperature relief valve and a pressure relief valve or a combination temperature and pressure relief valve conforming to ANSI Z21.22. A relief valve shall have a minimum rated capacity for the equipment it serves. Temperature relief valves shall be at a maximum of 210 degrees Fahrenheit (99 degrees Celsius). Pressure relief valves shall be set at the pressure rating of the water heater or storage tank, whichever is less, but shall not exceed 150 psi.

Sec. 49-1605. Installation of relief valves.
The temperature or temperature pressure relief valve shall be a fully automatic reseating type and shall be installed in a tapping in the top of the tank or in the side of the tank not more than six inches below its top. There shall not be a shut-off of any description between the relief valve and the water heater or on the discharge side of the relief valve.

Sec. 49-1606. Discharge of relief valves.

(a) Materials used for the discharge of the relief valve shall be rigid copper or steel materials as approved elsewhere in this chapter.

(b) Relief valves shall be piped full size of the outlet and installed so as to drain by gravity flow independently of any other relief valve or indirect drain, to an approved receiving fixture sufficient to receive the maximum discharge from the valve.

(c) If the discharge pipe exceeds a developed length of 30 feet or has more than four (4) 90-degree elbows it shall be increased one size.

(d) In new constructions a floor drain or floor sink shall be located immediately adjacent to the water heater, but in no case more than five feet from the water heater.

(e) Relief valves shall discharge to within six (6) inches of the floor or discharge to a floor drain, floor sink or other approved plumbing fixtures through an air gap and shall not discharge so as to be a hazard, a potential cause of damage or otherwise a nuisance.

(f) The end of the discharge pipe shall not be threaded.

Sec. 49-1607. Temperature controls.
All hot water supply systems shall be equipped with automatic temperature controls with adjustments for acceptable temperature settings. Every thermostatically controlled natural gas or propane water heater shall be equipped with a device which will automatically shut off the gas supply to the main burner and pilot burner when the pilot flame is extinguished.

Sec. 49-1608. Thermal expansion devices.

(a) An expansion compensation device, such as an expansion tank, shall be installed on the system side of each MBFP, the device will be sized to allow the safe expansion of water on the system side of the MBFP due to a 100-degree Fahrenheit change in temperature.

(b) A pressure relief valve shall be installed on the system side of the MBFP set at 125 psig.

(c) Bladder type expansion tanks shall be pressurized equal to the static pressure of the system.

(d) An expansion compensation device shall be installed on all systems connected to a water main having a pressure greater than 125 psig.

(e) An expansion compensation device, such as an expansion tank, shall be installed on all water heaters with a input of 200,000 btu or greater or multiple heaters with a combined input of 200,000 btu or greater. The device shall be sized to allow the safe expansion of water due to a 100-degree Fahrenheit change in temperature.

Sec. 49-1609. Circulating pipe between heating element and storage tank.
All circulating pipes between heating elements and the storage tank shall be of galvanized pipe or nonferrous metal. No valve or obstruction shall be placed in any circulating line nor shall any valve be placed anywhere on the system between the heating element and the temperature and pressure controls so as to prevent circulation of water.

Sec. 49-1610. Heat exchangers for potable water.

(a) A submerged element/coil in an indirect fired water tank used for the heating of potable water shall be double wall in construction per ASME Section VIII, Division I and UL listed for potable water. The annular space between the tubes shall be vented to the room.

(b) All heat exchangers shall conform to NSF 61.

Sec. 49-1611. Water heater vents.

(a) Except for heaters using solid fuel, only approved ANSI standard dampers shall be permitted in any vent or flue pipe.

(b) Draft hoods and vent pipes on water heaters shall be secured with screws. The draft hood shall be secured to the heater with screws.

(c) Vent sizing and installation shall comply with the requirements of Metropolitan Utilities District and NFPA 54.

Sec. 49-1612. Location of water heaters.

(a) No water heater which depends on the combustion of fuel for heat, except sealed combustion chamber-type water heaters, shall be installed in any room used or designed to be used for sleeping purposes, a bathroom, a clothes closet, or in any closet or other confined space opening into any bath or bedroom.

(b) A water heater installed above a ceiling or suspended in other than a mechanical or unfinished room shall have a watertight pan installed under the heater as follows:

(1) Shall be a minimum of four (4) inches larger than the diameter of the heater.

(2) Shall have a minimum depth of 1½ inch.

(3) Shall have a minimum three-quarters-inch drain and be piped independently of the relief valve to an indirect waste. Exception: If the pan drain line is increased to 1½ inch the relief valve may discharge above the 1½ inch drain outlet.

(4) Pans installed above the ceiling in spaces used as a return air shall be flame and smoke rated.

(c) Access and working space for water heaters.

(1) There shall be a clear space in front of the heater equal to the width of the heater plus six (6) inches in both length and width.

(2) There shall be a clear space of eighteen (18) inches above the heater.

(3) Access to the water heater shall be thru a passageway and/or a door large enough to permit removal of the heater, but not less than thirty (30) inches.

(4) There shall be a minimum clearance as required by the manufacturer, but not less than six (6) inches from the water heater to a wall.

(5) There shall be a minimum clearance as required by the manufacturer, but not less than four (4) inches from a hot water storage tank to a wall.

(6) For water heaters with service ports there shall be clearances for service as follows:
(i) A minimum of eighteen (18) inches for cleanout opening.
(ii) A minimum of twenty-four (24) inches for manhole opening.

(7) Water heaters with heating bundles shall have a minimum clearance of eighteen (18) inches for the inspection and servicing.

(8) All relief valves shall be readily accessible.

Sec. 49-1613. Noncombustion water heaters.
Noncombustion water heaters shall be installed in compliance with the manufacturer's restrictions.

Sec. 49-1614. Fuel lines.
All gas lines shall be properly sized for BTUs and distance using MUD requirements. Gas lines shall have an approved shut-off valve within two feet of the water heater.

Sec. 49-1615. Leveling of heater.
All water heaters shall be set level. If a shim is needed, it shall be of a material that will not easily rust or decay.

Sec. 49-1616 Water heater ASME rated.

(a) Any water heater with an input rating of 200,000 BTU's shall meet ASME Section 4 part HLW.

(b) A thermometer shall be installed that will be easily readable and so located to indicate the temperature of the water in the heater at or near the outlet between the heater and any valve.

(c) There shall be eighteen (18) inches of clearance or as required by the manufacturer from any side or back wall and shall have twenty-four (24) inch by the width of the heater as measured from the front of the burner.

(d) Boiler manholes shall have a five (5) foot clearance and hand holes not less than two (2) feet.

(e) All relief valves shall be readily accessible.

Sections. 49-1617--49-1699 Reserved.

ARTICLE XVII. BUILDING AND STORM SEWERS

Division 1 Generally

Sec. 49-1700. Applicability of requirements.
Connections to any sewer within the city or within the zoning jurisdiction of the city or to any sewer that discharges sewage or storm water into a sewer under the jurisdiction of the city, and any independent storm sewer having a free discharge, shall be made in conformance with this chapter and this article.

Sec. 49-1701. Safety standards.
All work shall conform to the general safety practices as set forth in the Occupational Safety Health Act requirements and any subsequent revisions thereto. Safety precautions shall not be in conflict with the applicable state labor laws.

Sec. 49-1702. Trenches in streets or alleys.
Trenches in public streets or alleys shall be excavated so as to impede public travel as little as possible. The crossings of gutters and all waterways shall be left in such shape as to allow the ready escape of water during storms.

Sec. 49-1703. Barricades, guards and warning lights.
The permittee shall, at all times after work is commenced, maintain proper barricades, safety guards and warning lights for the protection of the traveling public.

Sec. 49-1704. Work in streets not to be delayed.
Work on public streets must not be unnecessarily delayed. When directed by the chief plumbing inspector of the permits and inspections division, the number of workmen shall be increased to hasten the work as shall be deemed necessary for the public interest.

Sec. 49-1705. Permit required.
No building or property shall be connected to any sewer and no repair, extension or alteration of any existing sewer connection shall be made, and no stub made, without a permit for such purpose having first been obtained from the permits and inspections division.

Sec. 49-1706. Record of permits.
A permanent record of all sewer permits and drawings incidental thereto shall be filed with the plumbing section of the permits and inspections division.

Sec. 49-1707. Persons eligible to make or repair connections.
(a) The following persons shall be eligible to install, repair, extend, and make alterations to any sewer or stub to any public sewer:

(1) Licensed master plumbers;

(2) Licensed journeyman plumbers working for master plumbers; or

(3) Licensed sewer layers working for a licensed master plumber.

Exception: Public works employees may install, repair, extend and make alteration to sewers connected to public buildings controlled by the city

(b) The master plumber shall notify the city planning department (permits and inspection division) of the completion of such work giving the location by address and permit number. All such work shall be inspected by the planning department before it is covered.

Sec. 49-1708. Furnishing of information concerning location of public sewer.
Information concerning the location and depth of a public sewer shall be furnished to persons eligible or their agents to secure permits and to licensed engineers and architects by the public works department. All reasonable care will be taken to insure the correctness of such information, but such information will not be guaranteed and is given for estimating purposes only.

Sec.49-1709. Abandoned connections.
All abandoned sewer connections shall be cut off at the property line and properly plugged or capped and shall be inspected and recorded by the inspector before the connection is covered. If the city has no record of the sewer connection, the sewer shall be cut off outside of the building.

Sec. 49-1710. Time limit for connection in new sewer districts.
Every house or building within a newly created sewer district shall be connected to the main sewer within one year after completion and acceptance of sewer district by the public works department.

Sec. 49-1711. Consent required for connection when sewer has not been completed and accepted.
When a sewer connection is sought to be made with property before the sewer is fully completed and accepted by the city, the permits and inspections division may issue a permit to make such connection when the party making application for such connection shall have secured, in writing, the consent of the public works department and the contractor of the sewer to allow such a connection to be made.

Sec. 49-1712. Connection charge.
In addition to the permit fee as required in section 49-306, no connection for property outside the corporate limits of the city shall be made by anyone to any sewer, sewer system or drainage system connected with or draining into any sewer of the city without the property owner first paying a connection fee in the sum of $50.00 per connection; provided, however, that no such charge shall be collected by the city if an existing contract forbids collection of such fee by the city.

Where the property with which sewer connection is sought to be made, inside or outside the city, is not within the bounds of a regular sanitary sewer district or private sewer district, or where such property has not been assessed, or has not paid for the construction of the sewer to which connection is sought to be made, the permits and inspections division shall not issue a permit for such sewer connection until the property owner shall have paid to the city an equivalent front footage charge for the number of front feet of the entire property with which such connection is sought to be made. The equivalent front footage charge for any calendar year shall be the weighted average cost per front foot for the sewer districts assessed during the preceding three years and determined by the public works director on January 2 of each calendar year. The weighted average cost per front foot shall be determined by taking the summation of the assessed rate per front foot for each sewer district multiplied by the assessable front footage for each sewer district divided by the total assessable front footage of all sewer districts assessed in the calendar year. During any years when sewer districts were not constructed or assessed, the public works director may extend the most recently computed connection charges determined in accord with these provisions to compute the amount of the charge for such periods as may be necessary. The above requirements shall apply where sewer connections are sought to be made into a district sewer, as well as when such connection is sought to be made into a public sewer. It shall be the responsibility of the public works director to give to the permits and inspections division the footage costs as soon as possible after January 1 each year, but no later than January 15.

Sec. 49-1713. Repair of defective work.
If at any time after work has started and within the period of guarantee, in the judgment of the chief plumbing inspector of the permits and inspections division the work performed does not meet nationally accepted good practices or the requirements of this Code and repairs or reconstruction are required, the chief plumbing inspector shall notify the permittee, and, should the permittee refuse or neglect to begin to make such repairs within three working days from the date of the service of such notice, then the chief plumbing inspector shall cause such repairs or reconstruction to be made in such a manner to meet nationally accepted good practices or the requirements of this Code, and the cost thereof shall be paid by the permittee or his sureties or both. The guarantee period shall be for one year from the date of acceptance.

Secs. 49-1714--49-1727 Reserved.

Division 2. Construction Specifications

Sec. 49-1728. Compliance with division.
All building sewers shall be installed in compliance with the provisions of this division unless an exception has been approved by the chief plumbing inspector of the permits and inspections division.

Sec. 49-1729. Minimum depth of building sewer.
(a) All building sanitary sewers shall be at least three feet below finished grade to the crown of the building sewer, but shall be at least five feet below the established grade or the top of the street all points in the street. Exception: When the building sewer is connected to an individual sewage disposal system.

(b) No other pipes, cables or conduits shall be installed in such a way as to prevent easy access to the sanitary sewer, storm sewer, building storm drain or building drain. No other pipes, cables or conduits shall be installed in a parallel trench or in the same trench as the sanitary sewer or storm sewer, with less than an 18" horizontal separation.

(c) Pipes, cables or conduits installed above or below the sanitary sewer or storm sewer, and running in a direction perpendicular to the direction of the sewer line shall be installed with a vertical clearance of not less than 6 inches.

Sec. 49-1730. Slope of building sewer.
The building sewer shall be laid with a uniform slope from the public sewer to the end of the building drain. No building sewer shall be laid with less than one-eighth inch per foot fall or one percent grade.

Sec. 49-1731. Size of building sewer.
(a) Dwelling units and townhouses, as herein defined, shall have a minimum four (4) inches inside diameter building sewer.

(b) Commercial buildings or multiple dwelling units shall have a minimum six (6) inches inside diameter building sewer, but not less than the sizes of the building drain.

(c) On a parcel of land used for multiple dwelling units, commercial and industrial buildings, the fixture unit system shall be used to determine the size of the private sewer. The private sewer shall be one size larger than the required size for the total fixture units of the combined buildings. See Article XIV for manhole and cleanout requirements

Sec. 49-1732. Sewer materials.
Building sewer and storm sewer materials shall comply with the following:

(a) Compression joints vitrified clay bell and spigot pipe, ASTM C425. Pipe installation shall be in accordance

with ASTM C12.

(b) Cast-iron water mains, ASTM C600. Pipe installation shall be in accordance with ASTM C600.

(c) Polyvinyl chloride (PVC) sizes four inches and larger, ASTM D3034 SDR 26 and ASTM D2665 Schedule 40. Pipe installation shall be in accordance with ASTM D2321. All solvent cement shall meet ASTM D2564 and all solvent cement joints shall be made according to ASTM D2855, D2564 and F402. The pipe shall be positioned in the trench so that the identification markings on the pipe are readily visible for inspection.

(d) Cast iron bell and spigot pipe, ASTM C74, and compression gaskets, C-564.

(e) Reinforced concrete pipe shall be used for storm sewers only.

(f) A reducing transition coupling shall not be used at the connection of the building drain to the building sewer. Only reducing fittings with approved transition coupling will be allowed. Bushings are not approved reducing fittings.

(g) An approved reducing transition coupling may be used where the building sewer connects to the public sewer stub or tap.

(h) An approved transition coupling may be used to make repairs.

(i) Smooth interior corrugated polyethylene pipe and fittings may be used for storm sewers only. The use of such pipe shall conform to ASTM F405 for sizes 3 inches to 6 inches in diameter. The use of such pipe shall conform to ASTM F667 for sizes 8 inches to 10 inches in diameter. The use of such pipe shall conform to ASTM F2306 for sizes 12 inches to 60 inches in diameter Installation of such pipe under this subsection shall be in accordance with ASTM D 2321 and as recommended by the pipe manufacturer. Joints shall conform to ASTM F405, ASTM F667 and ASTM F2306. There shall not be more than a five percent deflection in the pipe after installation.

(j) Smooth interior corrugated polyvinyl chloride (PVC) pipe and fittings may be used for storm sewers only. Such pipe shall conform to ASTM F949. All gaskets for joining the pipe and fitting shall conform to ASTM F477. Installation of such pipe and fittings shall be in accordance with ASTM D 2321.

(k) Pressure building sewers:
   (1) Schedule 80 PVC pipe and fittings,
   (2) Cast iron class 50 water main and fittings.
   (3) High density polyethylene plastic pipe and fittings(HDPE) conforming to ASTM F-714, ASTM D1248, ASTM D3550 Standard SDR 17 may be used only when used with the directional boring method .

(l) High density polyethylene plastic pipe (HDPE) SDR 17 may be used only when used with the directional boring and pipe bursting method.

(m) Aluminized steel type 2 corrugated steel pipe may be used for storm water detention and retention only. Such pipe and fittings shall meet AASHTO specifications M274 and M36, ASTM specifications A 929 and A 760. Installation of such pipe and fittings shall be in accordance with ASTM A 798.

The plumbing board shall allow at least one approved transition fitting at all times.

Sec. 1733. Installation of thermoplastic pipe for sewers.

(a) Bedding:

(1) The trench bottom shall provide a firm, stable and uniform support for the full length of the pipe. Any part of the trench bottom that is overexcavated shall be backfilled to grade and compacted as required to provide firm pipe support. Blocking shall not be used to bring the pipe to grade.

(2) If wet conditions exist the mud must be removed and replaced with a compacted bedding material 4 to 6 inches deep. (No compaction is required if Class IA or IB material is used.)

(3) If ground water is infiltrating the trench, then the bottom of the trench must be overexcavated 12 inches and replaced with 12 inches of Class IA material if the pipe is 24 inches, in diameter or larger. If the pipe diameter is less than 24 inches then 8 inches of Class IA Material and 4 inches of Class IB are required. (No compaction is required if Class IA or IB material is used. IA is defined as angular, crushed stone or rock 1½ inches and larger and contain little or no fines. IB is defined as angular crushed stone or rock ⅜ to 1½ inches, what is generally know as ¾ crush and run.).

(b) Haunching:

(1) The haunch area is from the bottom of the trench to the springline of the pipe. The material used in the haunching area is the most important factor affecting pipe deflection.

(2) In 4 inch and 6 inches pipe sizes, native soil may be used in the haunching area (excluding frozen or clumped dirt) and it must be compacted by use of a hand tamper.

(3) For sizes 8 inches but not larger than 24 inches a Class IB may be used and no compaction is required. For sizes larger than 24 inches, a Class IA or IB may be used and no compaction is required.

(4) For sizes 8 inches and larger a Class II material may be used with a compaction of 85 percent. A test report by a third party confirming the compaction will be required. (Note: Class II is gravel or gravel-sand with little or no fines.)

(5) For sizes 8 inches and larger a Class III or IVA material may be used with a compaction of 90 percent. A test report by a third party confirming the compaction will be required. (Note: Class III is sand. IVA is native material.)

(c) Initial Backfill:

Initial backfill is the portion from the springline to 6 inches above the crown of the pipe. The same requirements for the haunching will apply with separate compaction tests for each area. (No compaction test is required if Class IA or IB is used.)

(d) Final Backfill:

Final backfill is that portion of the trench from 6 inches above the crown to the ground level. There are no special compaction requirements in this area except in the street or street right-of-way.

(e) Types of pipe:

These standards cover all solid wall PVC pipe, smooth interior polyethylene pipe and smooth interior corrugated PVC pipe.

(f) Making repairs to city sewer**:**

If a section of the main must be replaced with a new wye then after the section has been replaced, all mud shall be removed and only a Class IB material used a minimum of 6 inches under the pipe and 12 inches over the crown of the pipe.

(g) Width of the trench:

For solid wall PVC there shall be a minimum of 6 inches on each side of the pipe in sizes 4 inches to 8 inches. For larger sizes see the table below. For smooth interior polyethylene or PVC corrugated pipe there shall compliance with Table 1733 below.

Table 1733			
Solid Wall PVC		**Smooth Interior Polyethylene Or PVC Corrugated pipe**	
Pipe Size	Minimum Trench Width Inches	Pipe Size	Minimum Trench Width Inches
10	26	4-8	*
12	30	10	24
15	30	12	28
18	32	15	35
21	34	18	43
24	36	24	56
27	40	30	60
30	42	36	65
33	45	42	84
36	48	48	91
42	54	54	97
48	60	60	103
*A minimum of 6 inches on each side of the pipe			

Class IVB and V materials will not be allowed unless compaction requirements are designed by an engineer and compaction tests to confirm this system. See section 49-1741 for the use of recycled portland cement concrete.

Sec. 49-1734. Storm sewer in public right-of-ways.
All storm sewers laid in the public right-of-way shall be reinforced concrete pipe, cast-iron bell and spigot or cast-iron ductile class 50 water mains, from the city storm sewer or inlet to the property line.

Sec. 49-1735. Transformer vaults.
Transformer vault drains may be connected to storm sewers or combination sewers only, and in conformance with the requirements for storm drains.

Sec. 49-1736. Storm water connections and discharge.
Storm water from yards, drives, roofs and paved areas shall be connected only to combination sewers or storm sewers. The storm water shall not be permitted to flow over public property, adjacent private property or discharged in such a manner that increases the storm water flow above existing flows onto adjacent property. The rational formula, Q=CiA, shall be used to determine runoff flow, and basis for the calculation shall be a 10 year frequency storm. Point discharge of storm water onto adjacent property is prohibited.
The rational formula is: $Q = C\ i\ A$

Q =	Peak rate of runoff in cubic feet per second
C =	Runoff coefficient, an empirical coefficient representing a relationship between rainfall and runoff
i =	Average intensity of rainfall for the time of concentration (T_c) for a selected design storm
A =	Drainage area in acres

Sec. 49-1737. Minimum size of city main for storm drains connection.
No storm drains shall be connected with any main sewer smaller than ten inches in size.

Sec. 49-1738. Discharge of harmful substances into a storm drain.
No storm drain shall be connected to the storm sewer, which will discharge into said storm sewer substances that are likely to obstruct, clog, or in any manner injure the storm sewer.

Sec. 49-1739. Specifications for sewer taps and repairs.

(a) New sewer taps.

(1) All saddles shall be ductile iron conforming to ASTM 536-80 with a protected coat.

(2) All straps (bands), bolts, nuts and washers shall be 304 stainless steel.

(3) The straps (bands) shall have a minimum width of 31/2 inches.

(4) Gaskets shall be virgin SBR compounded for sewer service.

(5) All holes shall be drilled.

(6) Saddles known as flexible shall not be approved for use.

(b) Repair or replacement of wye.

(1) If the wye in the main is cracked or was damaged due to the installation of the building sewer, it shall be replaced with clay tile or plastic pipe and fittings, and using flexible couplings as approved by the city plumbing board.

(2) If only the hub on the branch is damaged, the following will apply:

(i) The wye may be replaced.

(ii) If the hub on the branch is not more than 25 percent damaged and the missing portion is above the spring line of the pipe, this may then be resealed with concrete.

(iii) If more than 25 percent is missing or is below the spring line, the wye shall be replaced. Exception: If the branch can be removed from the main without damaging the main, then a plastic wye saddle using an epoxy adhesive may be used. Bands of 304 stainless steel shall be used to hold the saddle in place during the backfill. The above must be approved by the plumbing inspector prior to installing the saddle.

(c) Mains without saddle. If the main is damaged and a saddle was not used in the original installation:

(1) A section of the main shall be replaced with a new wye or tee.

(2) If the opening will allow the use of a saddle, one may be used provided the plumbing inspector is present before and during the installation.

Sec. 49- 1740. Private Sewers.
All private sewers shall be installed as follows:

(a) Laid in alignment with a minimum uniform slope of one percent.

(b) A manhole shall be installed every three hundred (300) feet for maintains, at all change of directions and at the end of the sewer.

(c) The minimum size of all manholes used for maintains and change of directions shall be as required in section 49-1421

(d) Manholes shall be used at the connection to the city main and shall be as required by the public works department.

(e) Materials shall be as required in section 49-1732

Sec. 49-1741. Recycled portland cement concrete.
Recycled portland cement concrete (RPCC) may be used when the size of the aggregate meets the requirement of ASTM 2321. Recycled portland cement concrete shall meet the additional following ASTM Standards ASTM C136, ASTM C142, ASTM C88, ASTM D75, ASTM D2217, ASTM D421, ASTM C127, and ASTM D424. The suppler of the product shall submit on a yearly basis or as required by the chief plumbing inspector a third party certification showing compliance with the above ASTM Standards.

Sections 49-1742 Pipe bursting technique and materials.
Pipe bursting is a system by which the pneumatic burster unit splits the existing pipe while simultaneously installing a new Polyethylene pipe of the same size or larger size pipe where the old pipe existed, then connecting to existing building sewer or building drain.

(a) High density polyethylene plastic pipe and fittings(HDPE) shall conform to ASTM F-714, ASTM D1248, ASTM D3550 Standard and only SDR 17 pipe shall be used.

(b) All sections of HDPE pipe shall be assembled and joined on the job site. Jointing shall be accomplished by the heating and butt-fusion or electrofusion methods in strict conformance with the manufacturer's printed instructions. The joint strength shall be equal to or greater than the pipe. All master plumbers, journeyman plumbers or licensed sewer layers shall be fully trained and certified in the butt-fusion or electrofusion methods by the manufacturer of the equipment.

(c) When replacing existing sewers using the pipe bursting method HDPE SDR 17 pipe shall be used.

(d) HDPE material shall be white or black with a green stripes or green in color.

(e) Master plumbers, journeyman plumbers or licensed sewer layers shall be certified by the particular Pipe Bursting System Manufacturer that such person is a fully trained user of the pipe bursting system.

(f) Pipe bursting shall not be applicable if original sewer is sagging, has collapsed, or has other major obstructions.

(g) After installation all piping shall be videoed after flushing the pipe with water to verify a successful installation in the presence of the plumbing inspector.

(h) Only electrofusion transition fittings with approved transition coupling will be allowed when connecting to other types of materials.

(i) The bead on the inside of the pipe shall be removed.

Sections 49-1743—49-1799 Reserved.

ARTICLE XVIII. WATER CONDITIONING APPLIANCES

Sec. 49-1800. Compliance with article.
All connections made to a water supply system for the purpose of installing, replacing or relocating a water conditioning appliance which is not connected to the drainage system shall be made in conformance with the provisions of this article.

Sec. 49-1801. Permit required.
No work of installing, repairing or relocating any water conditioning appliance shall be commenced by any authorized person without first obtaining a permit from the permits and inspections division.

Sec. 49-1802. Exception to permit requirement.
Minor repairs of water conditioning appliances shall not require a permit under the provisions of this division.

Sec. 49-1803. Materials.
(a) All materials used to extend from the point of connection with the existing potable water system to the water conditioning appliance shall be as stated elsewhere in this chapter for potable water systems.

(b) All materials used to extend from the point of connection at the outlet of a water filtering appliance shall be as stated elsewhere in this chapter for potable water systems or as approved by the plumbing board.

(c) The plumbing board shall keep a list of all approved material and make it available upon request.

Sec. 49-1804. Water softeners.
(a) Residential water softeners shall have a minimum flow rate of 15 gallons per minute and meet NSF Standard #44.

(b) Commercial water softeners shall have a flow rate as determined by the sizing tables in section 49-1524 and fixture unit table in section 49-1522 or as sized by a registered mechanical engineer and meet NSF Standard #44.

Sec. 49-1805. Piping.
(a) A manual bypass shall be provided as part of the installation connection of all water softeners.

(b) Outside sill cocks and lawn sprinkler systems should not be connected to the softener.

(c) The softener drain line shall not be connected directly to the waste system. The drain line may be run to a floor drain, a laundry tray or a properly trapped outlet providing an air gap of at least two times the diameter of the drain line, but in no case less than 1½ inches above the top of the receptacle.

Sec. 49-1806. Sizing of water softeners for residential premises.
(a) Softeners shall be sized using the following demands:

(1) Hot water only softened: 25 gallons per person per day.
(2) Cold and hot water softened (except water to toilets): 45 gallons per person per day.

(3) All water softened including water to toilets: 60 gallons per person per day.

(b) When the occupancy of the home is unknown, it shall be sized based on the number of bedrooms, as follows:

Number of Bedrooms	Number of People
2	3
3	5
4	6
5	7
6	8

(c) When sizing a water softener, in addition to the water used per day, the water fixture units shall be considered so that the flow rate through the softener will be sufficient. See section 49-1522 for water fixture units.

(d) Softeners shall have sufficient rated softening capacity to allow at least three days between regenerations.

(e) The minimum softener capacity shall be 15,000 grains.

(f) When a water softener is to be installed on a private water supply, attention shall be given the capacity of the pump and well, and to the operating pressure, to assure proper operation.

Sec. 49-1807. Point-of-use appliances.
Reverse osmosis (RO) units:

(a) Reverse osmosis units shall be provided with a valve at the connection of the unit.

(b) Reject water:

(1) Reject water shall discharge through an air gap of two (2) pipe diameters or one inch, whichever is larger.

(2) Reject water for RO units may, if discharged though an approved NSF dispensing outlet, be connected to the sink waste on the fixture side of the trap using a branch tail-piece.

(c) Product water dispensing outlets shall be located so that the discharge outlet is directed downward and with the lower edge of the outlet not less than two (2) inches above the flood rim of the fixture.

(d) All components such as the tank, water dispensing outlets, membrane and piping shall conform to NSF Standard #58 and shall have the NSF seal displayed on all components.

Filtration devices:

(a) Drinking water filtration devices shall be installed with a valve at the inlet.

(b) Units for aesthetic effects shall conform to NSF Standard #42 and shall have the NSF seal on all components.

(c) Units for health effects shall conform to NSF Standard #53 and shall have the NSF seal displayed on all components.

Sections 49-1808—1899 Reserved.

ARTICLE XIX. LAWN SPRINKLER SYSTEMS

Sec. 49-1900. Compliance with article.
The installing, replacing, repairing or relocating of any lawn sprinkler system shall be made in conformance with the provisions of this chapter.

Sec. 49-1901. Permit required.
No work of installing. repairing or relocating any lawn sprinkler systems shall be commenced by any authorized person without first obtaining a permit from the permits and inspections division.

Sec. 49-1902. Connection to water distribution system.
Underground lawn sprinkler systems shall not be connected to the water distribution system unless such lawn sprinkler system shall be separated from the water distribution system by an approved vacuum breaker or backflow preventer.

Sec. 49-1903. Valves and controls.

(a) All single-family lawn sprinkler systems and all other system of fifty (50) heads or less with a one (1) inch or smaller tap may be equipped with an approved pressure vacuum breaker (PVB), which meets ANSI Standard #1020. The (PVB) shall be installed no less than 12 inches above the highest head and no less than 12 inches above the surrounding ground and met all other requirements of section 49-1503 (d). Where combination control valves and backflow preventers are installed, the bottom of the valve shall constitute the bottom of the backflow preventer

(b) All installations other than those described in (a) above shall have a reduced principle backflow preventer assembly approved by the plumbing board and by the Metropolitan Utilities District.

(c) All pressure vacuum breakers (PVB) must be installed outside of the building.

(d) A reduced pressure backflow preventer assembly can be installed inside a building if approved drainage is provided.

(e) If a master valve is installed inside a building, it should be of a brass material operated by a 24-volt solenoid.

(f) Copper pipe shall be run from the discharge side of a backflow preventer to approximately eight (8) inches below grade. If the backflow assembly is within three (3) feet of the building foundation the copper pipe shall continue perpendicular to the building to a minimum of three (3) feet from the building.

(g) Under no circumstances can an atmospheric vacuum breaker be used on a pressurized main line.

(h) Any sprinkler system on which a chemical or fertilizer injection system has been installed shall have a reduced pressure principle backflow preventer assembly installed according to this Code.

Sec. 49-1904. Materials and specifications.

(a) All pressure main lines shall be a minimum of 160 psi polyvinyl chloride pipe made of a virgin material with a NSF approval and installed at a minimum depth of eight inches.

(b) All lateral lines after control valves shall be a minimum of 80 psi polyethylene pipe or polyvinyl chloride pipe made of a virgin material with a NSF approval and installed at a minimum depth of eight inches.

(c) All polyvinyl chloride pipe joints shall be ring tight or solvent welded according to the pipe manufacturer's specifications.

(d) All polyethylene pipe shall be installed with polyvinyl chloride insert fittings using pinch or screw clamps

made of only stainless steel and clamped over the barbed portion of fitting. All polyvinyl chloride pipe larger than one inch shall be double clamped with one clamp directly over the barbs and one clamp behind the barbs.

(e) Saddles may be used only if a gasket is part of the saddle and the saddle is made of brass or plastic material with stainless steel or brass screws.

(f) All underground control or manual valves are to be made entirely of a noncorrosive material.

(g) All underground lawn sprinkler heads shall be set back at least two feet from the back of the curb or road surface of any adjacent public street or right-of-way

Sec. 49-1905. Electrical system.

(a) All electric wiring shall be a minimum of 18 gauge UL approved underground feed multi-strand for lengths of less than 500 feet, and a minimum of 14 gauge UL approved underground feed wire for lengths over 500 feet.

(b) All electrical connections underground shall be made by an approved waterproof connection.

(c) All 12-volt and 24-volt wiring shall be done by the lawn sprinkler contractor.

(d) All controllers with an internal transformer requiring hard wiring directly into circuit wiring shall have the wire installed by a licensed electrician and shall have a disconnect switch installed by the controller.

(e) All underground electric or hydraulic control valves shall be installed in a valve box.

(f) All exposed irrigation circuit wires above grade, before entering a structure, shall be encased in an approved electrical raceway.

Sec. 49-1906 Minimum design standards

All lawn sprinkling systems shall be design to the following minimum standards.

(a) Watering by a sprinkler systems shall be designed and adjusted to eliminate overspray onto public sidewalks, streets or any areas not under the control of the property owner including other private property.

(b) At no point in the system shall the velocity exceed five (5) feet per second (fps).

(c) Operating pressures:

(1) Fixed heads operating pressure shall be between 15 and 30 psig.

(2) Rotary heads operating pressure shall be between 40 and 70 psig.

(d) Head Spacing:

(1) Head spacing shall be either a square or triangular pattern in areas larger than 10 feet wide and shall have minimum head to head coverage.

(2) In areas less than 10 feet wide head spacing shall have a minimum head to head coverage except for drip emitters or bubblers.

(3) Matched precipitation rate shall be used when possible.

(e) Static pressure at the point of connection (POC) shall not exceed 80 psig.

Sections 49-1907—49-1999 Reserved.

ARTICLE XX. SWIMMING POOLS AND WATER FEATURES

Division I. Swimming Pools

Sec. 49-2000. Permit; general standards.

(a) Before installing any plumbing, water piping, filter system, circulating, pumping, chlorinating, or emptying system for a swimming, bathing, or wading pool, public or private, application shall be made for a permit from the permits and inspections division (see section 49-306).

(b) The application shall include sufficient detail to show the size and type of disposal, sources of water supply, and other pertinent data.

(c) In addition to complying with the requirements of Omaha Municipal Code chapter 49 all pools and spa shall comply with Omaha Municipal Code chapter 54.

(d) In addition to the requirements of this article, public pools shall be constructed in accordance with "Standard for Swimming Pool Design—2005" of the Nebraska State Department of Health.

(e) The above requirements shall not void any requirements by the building department, or any other city, state or federal departments for permits, plans, or approvals.

Sec. 49-2001. Required equipment.

Every swimming pool, spa or hot tub shall be equipped with mechanical equipment consisting of a pump, a filter, valves and other component parts necessary to comply with the requirements of this Code. All equipment shall be National Sanitation Foundation (NSF) approved for swimming pool service.

Sec. 49-2002. Circulating piping.

Circulating piping shall be designed to match the capacity of the pump. Maximum velocity shall not exceed eight feet per second. Exception: Jet inlet fittings shall be connected per the manufacturer's requirements.

Sec. 40-2003. Valves.

(a) Valves less than 2½ inches in size shall be brass or PVC.

(b) Valves 2½ inches and over may have bodies of cast-iron or brass or as approved elsewhere in this chapter.

(c) Each valve shall be fullway type with working parts of noncorrosive material.

Sec. 49-2004. Pipe and fittings.

(a) Circulation piping shall be type L copper with pressure type fittings or schedule 40 or 80 PVC with pressure type fittings. A primer is mandatory when using PVC.

(b) Underground potable water piping shall be type K.

(c) Aboveground potable water piping shall be type L or M copper with pressure fittings.

(d) PVC to female iron pipe adapters shall not be used.

(e) The first three feet from any spa or pool heater shall be type L copper with pressure type fittings.

Sec. 49-2005. Connection to potable water supply.

The potable water supply to any swimming pool, spa or hot tub shall be protected by an approved backflow preventer or air gap.

Sec. 49-2006. Discharge of waste.
Waste from pools, hot tubs and spas shall discharge to the sanitary sewer using an indirect waste and shall meet the following:

(a) The interceptor or funnel drain and the "P" trap piping shall be adequately sized to accommodate the flow of the filter/discharge pump.

(b) All swimming pools shall be connected to a sewer, using one of the options shown in figure 2006(b) I, II, and III.

(c) With the approval of the plumbing board, when no other means of waste water disposal is available, swimming pool waste water may be used for irrigation by surface or subsurface spreading.

(d) Waste water from a swimming pool shall not discharge into any drywell or private sewage disposal system.

(e) Waste lines shall allow for adequate cleanouts.

Sec. 49-2007. Watertight construction.
All swimming pools, hot tubs and spas shall be water tight with bottom and sides constructed of nonabsorbent material.

Sec. 49-2008. Heaters.
Heaters will conform to all plumbing, mechanical and electrical codes and MUD rules and regulations and the applicable city codes.

Sec. 49-2009. Tests.
All piping shall be inspected and approved before being covered. It shall be tested with static water or air pressure at 50 psi for 15 minutes. Warning: Do not use air pressure to test PVC piping.

Sec. 49-2010. Equipment foundations.
All equipment shall be set on a concrete base capable of supporting the equipment.

Sec. 49-2011. Hydrostatic devices.
A hydrostatic relief device shall be installed on all pools built in areas of anticipated high water table.

Sec. 49-2012. Material and equipment standards.
(a) Pipe, fittings and joints shall comply with Chapter 49, Articles VII and VIII.

(b) Gas-fired appliances and equipment shall comply with the MUD rules and regulations.

(c) Electrical appliances and equipment shall comply with Chapter 44 of this Code.
(d) Jetted whirlpool bathtubs and prefabricated spas shall comply with ANSI Z124.1.

(e) Swimming pool, spa and hot tub suction fittings shall comply with IAPMO PS 33-86.

Sec. 49-2013. Pipe and valve markings.

(a) Aboveground piping in equipment rooms shall be identified at three-foot intervals or between tees.

(b) Concealed aboveground piping shall be identified at ten-foot intervals and at tees.

(c) Valves shall be identified with embossed tags showing service and normal position (open or closed).

(d) Pipe markers shall conform to ANSI A13.11 for color and size of letters, and shall include direction of flow arrows at each marking.

Sections. 49-2014--49-2039. Reserved.

Division II. Water Features

Sec. 49-2040 Defined
"Water features" includes, but are not limited to, water fountains, ponds, fish ponds, waterfalls, spray parks.

Sec. 49-2041 Permit required.
Before installing any plumbing, water piping, filter system, circulating, pumping, chlorinating, or emptying system for a water feature, application shall be made for a permit from permits and inspections (see section 49-306). The application shall include sufficient detail to show the water features dimensions, size and type of disposal, sources of water supply, and other pertinent data. The above requirements shall not void any requirements by the planning department, health department, or any other city, state, county or federal departments for permits, plans, or approvals. All work performed shall comply with this Code and the following minimum requirements.

Sec. 49-2042 Testing and inspection.
All piping shall be inspected and approved before being covered. It shall have a hydrostatic test of 50 psig for 15 minutes.

Sec. 49-2043 Materials
(a) Circulation piping shall be type L copper with pressure type fittings or schedule 40 or 80 PVC pressure pipe with pressure type fittings. A primer is mandatory when using PVC.

(b) Underground potable water piping to the backflow preventer shall be type K.

(c) Aboveground potable water piping shall be type L or M copper with pressure fittings.

(d) PVC to female iron pipe adapters shall not be used.

(e) Underground water piping after the backflow preventer may be type K, L or M copper, schedule 40 or 80 PVC pressure pipe with pressure type fittings

Sec. 49-2044 Circulating piping.
Circulating piping shall be designed to match the capacity of the pump. Maximum velocity shall not exceed eight feet per second.

Sec. 49-2045 Connection to potable water supply.
The potable water supply to any water feature shall be protected by an approved backflow preventer or air gap.

Sec. 49-2046 Discharge of waste.
Waste from a water feature shall discharge to the sanitary sewer using an indirect waste and shall meet the following:

(a) The interceptor or funnel drain and the "P" trap piping shall be adequately sized to accommodate the flow of the filter/discharge pump.

(b) All water features shall be connected to a sanitary sewer, using one of the options shown in figure 2046(b)(1) and 2046(b)(2).

(c) Waste water from a water feature shall not discharge into any drywell or private sewage disposal system.

(d) Waste lines shall be provided with adequate cleanouts.

(e) When the water feature is located outside and the waste line does not enter a building to discharge, no vent will be required on the waste line.

(f) The waste may discharge through an airbreak.

Sec. 49-2047 Watertight construction.
All water features shall be water tight with bottom and sides constructed of nonabsorbent material.

Sec. 49-2048 Pipe and valve identification
(a) Aboveground piping in equipment rooms shall be identified at three-foot intervals or between tees.

(b) Concealed aboveground piping shall be identified at ten-foot intervals and at tees.

(c) Valves shall be identified with embossed tags showing service and normal position (open or closed).

(d) Pipe markers shall conform to ANSI A13.11 for color and size of letters, and shall include direction of flow arrows at each marking.

Sec. 49-2049. Equipment foundations.
All equipment shall be set on a concrete base capable of supporting the equipment.

Sec. 49-2050 Discharge onto public or private property.
Water features shall be designed to eliminate spray or any discharge onto public sidewalks, streets or any areas not under the control of the property owner including other private property.

Sections. 49-2051--49-2099. Reserved.

ARTICLE XXI. PRIVATE SEWAGE TREATMENT SYSTEMS.

Division I. Generally

Sec. 49-2100. Application of Article.
The provisions of this article shall apply to all private sewage treatment systems in the City and the area within three miles of the corporate limits thereof.

Sec. 49-2101. Definitions.
For the purposes of this article, the following words and phrases shall have the meanings respectively ascribed to them. The following words will be included:

Baffle shall mean a partition installed in a septic tank for proper operation of the tank and to provide maximum retention of solids, and includes vented sanitary tees and submerged pipes.

Bedroom shall mean any room within a dwelling that might reasonably be used as a sleeping room.

Biomat shall mean a biological layer formed by soil microorganisms along the trench bottom that secretes a gluey or sticky substance and anchor themselves to the soil or rock particles.

Board shall mean the County Board of Commissioners of Douglas County, Nebraska.

Building sewer shall mean line from building drain to septic system.

Cesspool shall mean an underground pit into which raw household sewage or other untreated liquid waste is discharged and from which the liquid seeps into the surrounding soil.

Community Water Supply System shall mean a public water supply system which serves at least fifteen service connections used by year round residents or regularly serves twenty-five year round residents.

Construction shall mean the installation of a new septic tank system or the replacement, alteration or expansion of an existing system.

Contamination shall mean introduction of any material that would cause potable water to be a hazard to human health.

DHHSS shall mean the State of Nebraska Department of Health and Human Services System.

Distribution *Box* shall mean a watertight box that receives the discharge of effluent from a septic tank and equalizes the flow to each individual line of a soil absorption system.

Distribution System shall mean piping or other devices which distribute sewage within a soil absorption system.

Dosing Chamber shall mean a receptacle for retaining sewage until pumped or siphoned to the soil absorption system.

Drop Box shall mean a type of septic effluent distribution which consists of "boxes" made of concrete, fiberglass, or polyethylene. Outlets at the top and bottom of the "boxes" provide distribution.

Effluen*t* shall mean sewage flowing out of a septic system.

Failure shall mean unauthorized discharge of effluent or sewage on the surface of the ground, or to a cesspool, seepage pit, dry well, or leaching pit, or to an absorption system with less than 4 feet to ground water or other limiting soil characteristics or which causes pollution of any air, water, or land of the State, or which threatens public health.

Fill shall mean soil, rock, gravel, or other material which has been placed over the original soil or bedrock and is characterized by a lack of distinct horizons or color patterns as found in naturally developed, undisturbed soils.

Filter Material shall mean clean gravel, crushed stone, or rock ranging in size from 1/4 to 2 1/2 inches or other materials as approved by the Health Department.

Grease Trap shall mean a watertight tank for the collection and retention of grease, which is accessible underground outside of the building for periodic removal of the contents.

Groundwater shall mean water occurring beneath the surface of the ground that fills available openings in rock or soil materials such that they may be considered saturated.

Health Department shall mean Douglas County Health Department

Health Officer shall mean the Director of the Douglas County Health Department or his authorized representative.

Industrial Waste shall mean sewage not otherwise defined as domestic sewage, including the runoff and leachate from areas that received pollutants associated with industrial or commercial storage, handling, or processing.

Lateral Field Aeration/Injection Process shall mean an alteration of a septic system.

NDEQ shall mean the Nebraska Department of Environmental Quality

Percolation Rate shall mean the rate obtained from percolation tests used in determining the amount of absorption area required, usually expressed in minutes per inch.
Percolation Test shall mean the determination of the suitability of an area for subsurface sewage effluent treatment by testing the rate at which the undisturbed soil in an excavated pit or hole of stand size will absorb liquid per unit of

surface area.

Perforated Pipe shall mean one type of distribution tile generally four inches in diameter with one-half to three-fourths inch diameter perforations designed to distribute sewage effluent.

Permit shall mean a written permit issued by the Douglas County Health Department, permitting the construction of a private septic system under these regulations.

Person shall mean any person, firm, partnership, association, corporation, company, or organization of any kind.

Pollution shall mean a material that, if allowed to enter a portable water system could degrade the esthetic property of water with taste, color or odor, but would not be hazardous to human health.

Private Sewage Treatment Systems

> ***Individual*** shall mean a septic system, or part thereof, serving a dwelling or other establishment which uses subsurface soil treatment and disposal.
>
> ***Community*** shall mean a septic system serving two or more dwellings or other establishments and which uses subsurface soil treatment and disposal.

Private Well shall mean a well which provides water supply to less than fifteen service connections or regularly serves less than twenty-five individuals.

Public Septic System shall mean a septic system operated by a governmental subdivision.

Public Water Supply System shall mean a water supply system designed to provide the public piped water fit for human consumption, if such system has at least fifteen service connections or regularly services at least twenty-five individuals daily at least sixty days out of the year. This definition shall include any collection, treatment, storage, or distribution facilities under control of the operator of such system and used primarily in connection with such system and any collection or pretreatment storage facilities not under such control which are used primarily in connection with such system.

Septic System shall mean a reservoir or tank which receives sewage and by bacterial action and sedimentation effects a process of clarification and decomposition of solids. Such system includes the piping, distribution boxes or drop boxes, seepage beds, drainfields, absorption fields, and mounds that convey and dispose of sewage.

Septic Tank shall mean a reservoir or tank which receives sewage and by bacterial action and sedimentation effects a process of clarification and decomposition of solids.

Abandoned Septic Tank shall mean when a building is disconnected from an individual sewage treatment system.
Sewage shall mean any water carried domestic waste, exclusive of footing and roof drainage, from any industrial, agricultural, or commercial establishment, or any dwelling or any other structure. Domestic waste includes liquid waste produced by toilets, bathing, laundry, culinary operations, and the floor drains associated with these sources, and specifically excludes animal waste and commercial or industrial waste water.

Soil Absorption Field shall mean a drainfield, lateral field, or seepage bed, including the effluent application, and distribution system intended for the treatment of sewage or treatment of effluent. The absorption system includes the infiltrative surface in the absorption trench and the soil between and around the trenches.

Surface Water shall mean all water within the jurisdiction of Nebraska, including all streams, lakes, ponds, impounding reservoirs, marshes, wetlands, watercourses, waterways, springs, canal systems, drainage systems, and all other bodies or accumulations of water, natural or artificial, public or private, situated wholly or partly within or bordering upon the state. Impounded waters in this definition do not include areas designated by the NDEQ as wastewater treatment or wastewater retention facilities or irrigation reuse pits.

Title 124 shall mean NDEQ Rules and Regulations for the Design, Operation and Maintenance of Septic Tanks.

Trench shall mean an excavation area of the soil of predetermined size used for final treatment and disposal of septic tank effluent.

Sec. 49-2102. Sanitation Requirements.
In order to protect the general health, safety and welfare of the people of City and of the general public, private sewage treatment systems shall be constructed, operated, used and maintained in accordance with the standards and requirements of this article to insure that waste discharge therein shall not:

(a) Contaminate any drinking water supply;

(b) Be accessible to insects, rodents, or other possible carriers of disease which may come into contact with food or drinking water;

(c) Pollute or contaminate the waters of any bathing beach or stream used for public or domestic water supply purposes or for recreation purposes;

(d) Be a health hazard or accessible to children;

(e) Be a nuisance; and,

(f) Violate any other laws or regulations governing water pollution or sewage treatment.

Sec. 49-2103. Privies, Cesspools Prohibited Private Sewer Connections Generally.
No privy or cesspool shall be maintained or built within the City. When a public sewer system is available within 200 feet of the premises, or adjacent to and/or parallel to the property, proper connection to the public sewer system shall be required. When a public sewer is not available for use, all liquid waste from buildings shall be connected to a private sewage treatment system approved by the Health Director. No private sewage treatment system shall be maintained within one year after a public sewer becomes available. No private sewage treatment system shall be constructed, altered or extended within the City until a valid permit is obtained from the Health Director for each specific construction, alteration or extension proposed.

This section shall be enforced by the Health Director who is hereby empowered to order immediate connection to a sewer if the existing private sewage treatment system is detrimental to the public health.

Sec. 49-2104. Floor drains.
Floor drains connected to a sewage treatment system are not allowed in garages.

Sec. 49-2105. Inspections.
The Health Department is hereby authorized and directed to make such inspections as are necessary to determine satisfactory compliance with this article and regulations promulgated hereunder.

All inspections conducted pursuant to this article shall be performed by persons who are registered environmental health specialists or trainees as defined in Neb. Rev. Stats. 71-3702.

It shall be the duty of the owner or occupant of a property to give the Health Department free access to the property at reasonable times for the purpose of making such inspections as are necessary to determine compliance with the requirements of this article and regulations promulgated hereunder.

Sec. 49-2106. Conflict with State Health Department Requirements.
In the design, construction, installation and operation of private sewage treatment systems state laws and the rules, regulations and requirements of the State Department of Health shall be observed. In the event of any conflict between the provisions of this article and any provision of the state law or requirement, rule or regulation of the State Department of Health or the Department of Environmental Quality, the provisions imposing the higher standard or the more stringent requirement shall be controlling.

Sec. 49-2107. Conflicting Code Provisions.
In any case where a provision of this article is found to be in conflict with any other provision of the Omaha Municipal Code pertaining to zoning, building, plumbing, fire, safety or health existing on the effective date of this article, the provisions which establishes the higher standard for the promotion and protection of the health and safety of the people shall prevail. In any case where a provision of this article is found to be in conflict with any other provisions of the Omaha Municipal Code existing on the effective date of this article, which establishes a lower standard for the promotion and protection of the health and safety of the people, the provisions of this article shall prevail.

Division II. Construction Requirements.

Sec. 49-2108. Application of division.
In addition to the requirements contained in section 49-2102 of this Article, the following provisions of this division shall be complied with in the construction of private sewage treatment systems.

Sec. 49-2109. Completion of construction; notice, inspection.
After construction is complete, but before the private sewage treatment system is back filled, the Health Department shall be notified in order that an inspection can be made. No part of the sewage treatment system shall be back filled until such part has been inspected and approved; provided that the Health Department must make such inspection within eight (8) working hours after the Health Department has been notified that construction is complete and ready for inspection; provided further that in computing the eight (8) hour period, Saturdays, Sundays and Holidays shall be excluded.

Sec. 49-2110. Final grade construction.
Construction of the private sewage treatment system shall not begin until the final grades of the area in which the system is to be situated are finished.

Sec. 49-2111. Location generally.
The septic tank of the private sewage treatment system shall be at least seventy-five (75) feet from any well. The absorption fields shall be at least one-hundred (100) feet from any well and on the down stream side.

Sec. 49-2112. Sewer line.
The sewer line from the house to the septic tank shall be water tight and shall be laid with a slope of not less than one-eighth inch per foot and shall comply with Article XVII of this Chapter.

Sec. 49-2113. Septic tanks materials.
Septic tanks may be built of reinforced concrete or they may be of prefabricated commercial construction of reinforced concrete, fiber glass, fiber reinforced plastic, high density plastic, and any other tanks in compliance with Title 124-rules and regulations for the design, operation and maintenance of septic tanks, provided that they are approved by the Health Department. It is recommended that concrete tanks be certified by the American Concrete Institute. All septic tanks shall be of water tight construction.
Sec. 49-2114. Septic tank cover.
The septic tank cover shall be designed for a load of not less than 150 pounds per square inch and the septic tank must be equipped with a separate access hole at least twelve (12) inches in diameter to permit cleaning out of the tank. The tank must be pumped out through this access hole.

Sec. 49-2115. Septic tank location.
a. The septic tank shall be at least fifteen (15) feet from the foundation of the dwelling and fifteen (15) feet from any other structure on site.

b. The septic tank shall be at least five (5) feet from the property lot lines.

Sec. 49-2116. Private Sewage Treatment System Setbacks.
The minimum required set-backs is set forth in Table 49-2116

Minimum Setback Distance Feet		
Item	Tanks	Absorption, Infiltrative, and Evaporative Systems
Surface Water	50 ft.	50 ft.
Private Drinking Water Wells	75 ft.	100 ft.
Public Drink Water Supply Wells		
Non-Community System	75 ft.	100 ft.
Community System	500 ft.	500 ft.
Community System when a septic system or soil absorption system of > 1000 gpd is	500 ft.	Evaluated by professional engineer for potential impact on the well and submitted to the Department if less than 1000 ft.
All Other Water Wells:	75 ft.	100 ft.
Water Lines:		
Pressure-Main	10 ft.	25 ft.
Pressure-Service Connection	10 ft.	25 ft.
Suction Lines	50 ft.	100 ft.
Property Lines	5 ft.	5 ft.
	Minimum Setback Distance Feet	
Foundations and in ground swimming pools	15 ft.	30 ft.
No basement or walk-out basement.	15 ft.	20 ft.

Sec. 49-2117. Septic tanks connection.
Inlet and outlet connection to the septic tank shall be equipped with sanitary tees at least four (4) inches in diameter or baffles. The inlet tee or baffle shall project into the liquid in the septic tank to a level greater or equal to six inches and no more than 12 inches to assure the influent will be directed below the scum layer. The outlet tee or baffle shall be equal to 0.4 of the liquid depth of the tank and round tanks shall be equal to 0.35 of the liquid depth of the tank. (See, figure 2117-1, 2117-2 and 2117-3)

Sec. 49-2118. Septic tanks capacity.
(a) The minimum capacity for a septic tank for a single family dwelling shall be as follows:

(1) The minimum capacity for any dwelling with a clothes washing machine, dishwasher, garbage grinder or whirlpool bath is 1,500 gallons.

(2) The minimum capacity for a dwelling with two or fewer bed rooms is 1,000 gallons.

(3) The minimum capacity for a dwelling with three to five bedrooms is 1,500 gallons.

(4) The minimum capacity for a dwelling with over five bedrooms shall be 1,500 gallons plus 250 gallons for each additional bedroom.

(b) The capacity for a septic tank for any structure other than a single residence dwelling shall be determined on the basis of the estimated quantities of sewage flow. Title 124 shall be used for sizing requirements.

Sec. 49-2119. Distribution box.
A distribution box or drop boxes shall be provided when more than one absorption field lateral is utilized and all absorption field laterals shall originate at the distribution box or drop box. (See figure 2119-1)

When drop boxes are used the following criteria shall be followed:

(a) The drop box shall be water tight and constructed of durable materials not subject to excessive corrosion or decay.

(b) The invert of the inlet pipe shall be at least one inch higher than the invert of the outlet pipe to the next trench.

(c) The invert of the outlet pipe to the next trench shall be at least two inches higher than the invert of the outlet pipe of the trench in which the box is located.

(d) When septic effluent is delivered to the drop box by a pump, the pump discharge shall be directed against a wall or side of the box on which there is no outlet.

(e) The drop box shall have a removable cover for inspection purposes. (See figures 2119-2 and 2119-3

Sec. 49-2120. Effluent pipe.
The effluent pipe from the septic tank to the distribution box shall be water tight.

Sec. 49-2121. Distribution box elevation.
All of the outlets of the distribution box shall be exactly the same elevation when installed and after the system has been back-filled. The outlet pipes from the distribution box shall have equal slopes for five feet after leaving the box. All the trenches shall be the same length and shall be able to treat a like amount of effluent.

Sec. 49-2122. Dosing chamber/when required.
When the septic tank must be placed at a depth too great for direct discharge to a distribution box at the proper level, a dosing chamber shall be provided at the outlet end of the septic tank.

Sec. 49-2123. Dosing chamber/specifications.
The dosing chamber shall be of watertight construction, it shall be equipped with an automatic pump to pump septic tank effluent to the distribution box or drop box, and it shall be of sufficient size to permit servicing and to provide effluent storage during electrical power interruptions.

Sec. 49-2124. Absorption area minimum.
The minimum total absorption area for any structure other than a single residence dwelling shall be determined on the basis of the estimated quantities of sewage flow.

Sec. 49-2125. Absorption field/percolation tests.
Percolation tests shall be required in any location where the health department deems it necessary to establish the absorption qualities of the soil. A boring of a minimum of ten (10) feet to determine soil characteristics and the seasonal high ground water table shall be required.

Sec. 49-2126. Absorption trench.
The required square footage for an absorption trench for a dwelling shall be determined by the following table when a percolation test was performed:

ABSORPTION TRENCH REQUIREMENTS

Perc Rate in minutes per inch	1 Bedroom 200 gpd	2 Bedroom 300 gpd	3 Bedroom 400 gpd	4 Bedroom 500 gpd	5 Bedroom 600 gpd	6 Bedroom 700 gpd	7 Bedroom 800 gpd	8 Bedroom 900 gpd	9 Bedroom 1000 gpd
< 5	Systems must be designed with a 12 inch loamy sand liner that would have a percolation rate of 15 to 20 minutes per inch and shall be designed at the 11-20 minute per inch level								
5-10	165	330	495	660	825	990	1155	1320	1485
11-20	210	420	630	840	1050	1260	1470	1680	1890
21-30	250	500	750	1000	1250	1500	1750	2000	2250

31-40	275	550	825	1100	1375	1650	1925	2200	2475
41-50	330	660	990	1320	1650	1980	2310	2640	2970
51-60	350	700	1050	1400	1750	2100	2450	2800	3150
>60	Systems be designed by a professional engineer. Construction Permit Needed								

The required square footage for establishments shall be determined by the following equation: The daily design flow divided by (Five divided by the square root of the percolation rate). sq. ft. = design flow (gpd) ÷ (5 ÷ √ percolation (min/in)).

Sec. 49-2127. Single family absorption area.
The total absorption area in the effluent treatment field shall be based on the percolation test and the number of bedrooms in a single family residence. The minimum total absorption area shall be 300 square feet.

Sec. 49-2128. Absorption area design criteria.
(a) No subsurface effluent treatment facility shall be installed in uncompacted field ground.

(b) No part of any absorption field shall be installed less than five feet from any property lot line.

(c) The absorption field shall be at least 30 feet from any dwelling foundation and/or in-ground swimming pool. If there is no basement, this distance may be reduced to twenty feet. (See figure 2111)

Sec. 49-2129. Absorption field criteria.
(a) The minimum depth of distribution piping shall be fifteen inches.

(b) The maximum depth of distribution piping shall be 30 inches. The recommended depth is 24 inches. The maximum depth of lateral field, trench, and seepage bed shall be 48 inches.

(c) Distribution piping shall be at least four (4) inches in diameter.

(d) The maximum length for any individual lateral shall be 100 feet.

(e) The minimum width of lateral trench shall be 24 inches and maximum width shall be 60 inches.

(f) The minimum distance between laterals shall be seven (7) feet.

(g) Maximum slope of absorption field lines shall be four (4) inches per 100 feet. Recommended slope is 0 to 4 inches per 100 feet.

(h) Concrete or plastic half moon tiles or chambers may be used for sewage distribution in the absorption trench. The width of the tile or chambers must be 20 inches or greater for a 60 inch wide trench. The maximum trench width shall be 36 inches when using tiles or chambers less than 20 inches wide.

(i) All turns in lateral shall be made by the use of bends and ells cemented in place.

(j) The filter material shall be covered with untreated building paper or a two inch layer of hay or straw or similar approved permeable materials.

(k) The minimum depth of filter material under four inch perforated pipe consisting of clean gravel, rock or crushed stone under distribution system shall be six (6) inches and no more than 24 inches.

(l) The minimum filter material over distribution system shall be three (3) inches. (
See figures 2129-1, 2129-2 and 2129-3)

Sec. 49-2130. Seepage beds requirements.
(a) A seepage bed may be used for the treatment field only when conditions prevent the installation of a conventional lateral system.

(b) A seepage bed is any excavation trench wider than five (5) feet.

(c) Seepage bed construction shall be limited to areas having natural slopes of less than six (6) percent.

(d) If a seepage bed is used, the minimum depth of gravel under perforated drain pipe shall be 12 inches and minimum fill of gravel over pipe shall be six (6) inches.

(e) Area requirements for seepage bed shall be at least 25 percent greater than for a conventional lateral system, which would service the same installation.

(f) The tile or distribution pipe in beds shall be uniformly spaced no more than five (5) feet apart and no more than 30 inches from the side walls of the beds.

(g) Absorption area for a bed shall be calculated by determining the required square footage for a trench multiplying the area by the factor in the following table:

ABSORPTION AREA FACTORS

Width of Bed in feet	Factor
>5 to 10	1.25
>10 to 15	1.33
>15 to 20	1.5
> 20	Unacceptable

Sec. 49-2131. Surface water setbacks.

Septic system set back distances from lakes, rivers and streams must be at least 50 feet from ordinary high water mark.

Sec. 49-2132. Groundwater minimum.
The bottom of soil absorption fields must be at least four feet above seasonal high water table.

Sec. 49-2133. Grease trap.
It is required that an external grease trap be installed for all restaurants and establishments involved in food preparation that are served by a private sewage treatment system in accordance with Article XI

Sec. 49-2134. Abandonment of septic tanks.
Whenever the use of a septic tank system is discontinued following the connection to a sanitary sewer or following condemnation or demolition of a building or property or due to the construction of other on-site sewage treatment system, the septic tank system shall be properly abandoned and any other further use of the system for any purpose shall be prohibited. The abandoned septic tank shall be pumped of all liquids, the top of the tank shall be destroyed, and the tank shall be filled with sand or compacted earth, or the tank may be removed after pumping.

Sec. 49-2135. Commercial installer requirements.
Every commercial installer of private sewage treatment systems shall have a master plumber's license issued by the City of Omaha, or a sewer layer's license issued by the City of Omaha, or a certification of competency issued by the Health Department beginning January 1, 2000. A certificate of competency will be issued by the Health Department after the installer attends a training clinic and passes a written examination with the grade of 70 percent or better. The training clinic and examination will be administered by the Health Department. The certification shall be valid for a period of four years. The fee for such certification and training clinic shall be as determined by the Board with the recommendation of the Douglas County Board of Health.

Division III. Permits.

Sec. 49-2136. Required.
It shall be unlawful for any person to construct, alter, or extend private sewage treatment systems within the City unless such person holds a valid permit issued by the Health Department in the name of such person for the specific construction, alteration or extension proposed. The permit issued by the Health Department shall be in addition to the zoning permit for building or any other permit required, including those required under Title 124, and shall be obtained prior to construction, alteration and extension of the residence or facility to be served.

All applications for permits for the construction, alteration and extension of private sewage treatment systems shall be made to the Health Department, who is hereby authorized to issue a permit therefore upon compliance by the applicant with all the provisions of this regulation and any other pertinent regulations. A permit for the construction, alteration and extension of a septic system may be denied where a public sewage system is available to the premise and parallel to the property along a boundary.

Sec. 49-2137. Flood plain.
All permits located in ten year flood plain (floodway) shall contact NDEC for required approval before a permit will be issued.

Sec. 49-2138. Application.
Applications for a permit required by the provisions of this division shall be made to the Health Department, on a form provided by the Health Department, in writing, signed by the applicant, and shall contain the following:

(a) Name and address of the applicant;

(b) Legal description and address, if available, of the property on which construction, alteration or extension is proposed; and,

(c) Complete plan of the proposed treatment facility, with substantiating data, if necessary, attesting to its compliance with the minimum standards of the Health Department and Title 124.

Sec. 49-2139. Contents of plan.
A complete plan for the purpose of obtaining a permit to be issued by the Health Department as required by the provisions of this division shall include:

(a) The number, location and size of all sewage treatment facilities to be constructed, altered or extended;

(b) The location of water supplies, water supply piping, existing septic facilities, buildings or dwellings and adjacent lot lines;

(c) Plans of the proposed sewage treatment facilities to be constructed, altered or extended;

(d) The number and type of plumbing fixtures to be installed in the building;

(e) The number of bedrooms if a dwelling and the number of people to be served by the facility if other than a dwelling; and,

(f) The results of percolation tests and ten-foot boring tests at the proposed site of the absorption field.

In addition to the requirements of the Health Department, the private sewage treatment layout diagram must be included on the plot plan submitted to the Permits and Inspection Division. These plans must provide adequate space for reserve areas for replacement systems.

Sec. 49-2140. Fees.
The fee for a permit to construct a private sewage treatment system shall be as established by the County Board with recommendation by the Douglas County Board of Health.

Sec. 49-2141. Issuance.
The Health Department shall issue permits required by the provisions of this section upon compliance by the applicant therefore with all provisions of this article and any other applicable provision of this Code.

Sec. 49-2142. Expiration.
Every permit issued under the provisions of this division shall expire one year after its date of issuance."

Sections 49-2143—2199 Reserved

ARTICLE XXII. UNIFORM SOLAR ENERGY CODE

Sec. 49-2200. Adopted; amendments.
There is hereby adopted by the city, for the purpose of establishing rules and regulations for the erection, installation, alteration, repairs, relocation, replacement or additions to any solar domestic water or swimming pool heating system within this jurisdiction, including permits and penalties, that certain code known as the Uniform Solar Energy Code published by the International Association of Plumbing and Mechanical Officials, being particularly the 1988 edition, except as portions are hereinafter deleted, modified or amended, of which three copies are on file in the office of the city clerk; and the same is hereby adopted and incorporated as fully as if set out at length herein.

Specific amendments to the aforesaid code are as follows:

Part I, Administration. Delete this section in its entirety.

Chapter 4, section 402(c). Delete the sentence: "Exception: A single wall heat exchanger may be used when in compliance with all of the following." Delete subparagraphs (1), (2), (3), (4) and (5) following the above sentence.
Chapter 4, section 405(d). Revise this paragraph to read as follows:

Relief valves shall be provided with a full size drain of galvanized steel or hard drawn copper pipe and fittings and shall extend from the valve to an approved location. No part of such drain pipe shall be trapped and the terminal end of the drain pipe shall not be threaded and shall maintain an air gap.

Chapter 8. Delete this chapter in its entirety.

Sections 49-2201—49-2299 Reserved.

ARTICLE XXIII WATER CONSERVATION

Division I. Gray Water

Sec. 49-2300 Reservoir.
When gray water is collected for reuse the following requirements shall apply:

(a) Gray water shall be collected in a reservoir constructed of durable, nonabsorbent, and corrosion-resistant closed gas-tight vessel.

(b) Reservoir shall be supplied with overflow protection connected to the sanitary sewer with an approved backwater valve.

(c) A drain valve shall be provided at the lowest point of the reservoir and connected to the sanitary sewer main with an approved backwater valve.

(d) Reservoir shall be supplied with connections to allow for cleaning. Make-up water shall be through a tank and pump system with an air gap between water supply and the make-up tank. (see figure 49-2300)

(e) Reservoir shall be vented a minimum of ½ the diameter of the inlet or minimum of 1½ inch which ever is greater. The vent shall be ran independently through the roof.

Sec. 49-2301 Installation.

(a) All drain, waste and vent piping shall comply with Article IX and XIII except as modified herein.

(b) All gray water piping shall comply with Article XV except as modified herein.

(c) Hose bibs on gray water piping are prohibited.

(d) All gray water piping shall be separate and independent of any potable water system.

(e) Any building using gray water shall install a master backflow assembly on the water service after the meter. Makeup water to the reservoir shall be through an air gap into a holding tank and then pumped into the reservoir.

Sec. 49-2302 Conversion of gray water supply to a potable supply.

If due to any gray water systems failure, it becomes necessary to convert from gray water to a potable water supply it shall require the following steps to be taken:

(1) The gray water reservoir shall be removed and a reduced pressure principal backflow preventer assembly shall be installed at the point of connection with the potable water system.

Sec. 49-2303 Filtration.

(a) Gray water shall pass through a NSF approved pre and final sediment filter. Prior to entering the reservoir there shall be a pre-filter having a fifty (50)-micron rating. Prior to being connected to the distribution system there shall be a final filter having a five (5)-micron rating.

(b) Gray water shall pass through a NSF approved carbon filter prior to being connected to the distribution piping system. Carbon filter shall have a ten (10)-micron rating.

(c) Gray water shall be treated with a defoaming agent prior to entering the reservoir.

Sec. 49-2304 Disinfection.

Gray water shall be disinfected. Disinfecting methods shall be chlorine, ultraviolet light, ozone, or as approved by the chief plumbing inspector.

Sec. 49-2305 Identification.

(a) All piping conveying gray water shall be adequately identified by a distinctive purple paint with black letters reading " GRAY WATER" at no more than 20 feet on center and a minimum one time per room or space and showing direction of flow.

(b) Reservoir shall be labeled "GRAY WATER NOT FOR HUMAN CONSUMPTION".

(c) Labels shall be placed so they are readable from the floor.

Sec. 49-2306 Coloring

Gray water shall be dyed blue or green with a food grade vegetable dye.

Sec. 49-2307 Limitations on use.

(a) Gray water shall be used for the flushing of water closets and urinals only.

(b) Gray water systems shall not be used in hospitals, medical or dental facilities.

Sec. 49-2308-49-2329 Reserved

Division II. Rainwater Harvesting

Sec. 49-2330 General.

(a) The requirements of Article XII shall apply to rainwater harvesting systems as modified herein.

(b) Overflow roof drains shall not be permitted to be connected to the rainwater harvesting system and shall discharge to the storm sewer or to daylight. Overflow roof drains shall conform to section 49-1210.

(c) If rainwater is used as gray water the requirements for gray water shall apply.

Sec. 49-2331 Reservoir.

When rainwater water is collected for reuse the following requirements shall apply:

(a) Rainwater shall be collected in a reservoir constructed of durable, nonabsorbent, and corrosion-resistant closed gas-tight vessel.

(b) Reservoir shall be supplied with overflow protection connected to the storm sewer with a backwater valve.

(c) A drain valve shall be provided at the lowest point of the reservoir and connected to the storm sewer main with a backwater valve.

(d) Reservoir shall be supplied with connections to allow for cleaning.

Sec. 49-2332 Installation.

(a) All rainwater drainage piping shall comply with Article XII except as modified herein.

(b) All water piping shall comply with Article XV except as modified herein.

(c) Hose bibs on water piping are prohibited.

(d) All water piping shall be separate and independent of any potable water system.

(e) Any building using rainwater harvesting shall install a master backflow assembly on the water service after the meter. Makeup water to the reservoir shall be through an air gap into a holding tank and then pumped into the reservoir.

Sec. 49-2333 Filtration.

All rain water shall pass through a NSF approved 50-micron sediment filter prior to entering the piping system.

Sec. 49-2334 Identification.

(a) Reservoir shall be labeled “RAINWATER, NOT FOR HUMAN CONSUMPTION”.

(b) Labels shall be placed so they are readable from the floor.

Sec. 49-2335-49-2399 Reserved

APPENDIX O

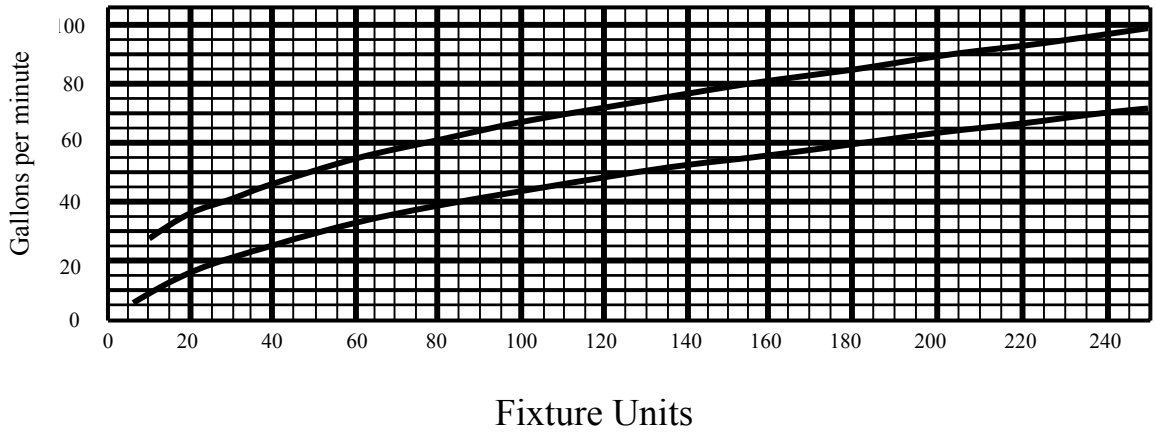
Gallons per minute
100
80
60
40
20
0
0
20
40
60
80
100
120
140
160
180
200
220
240
Fixture Units

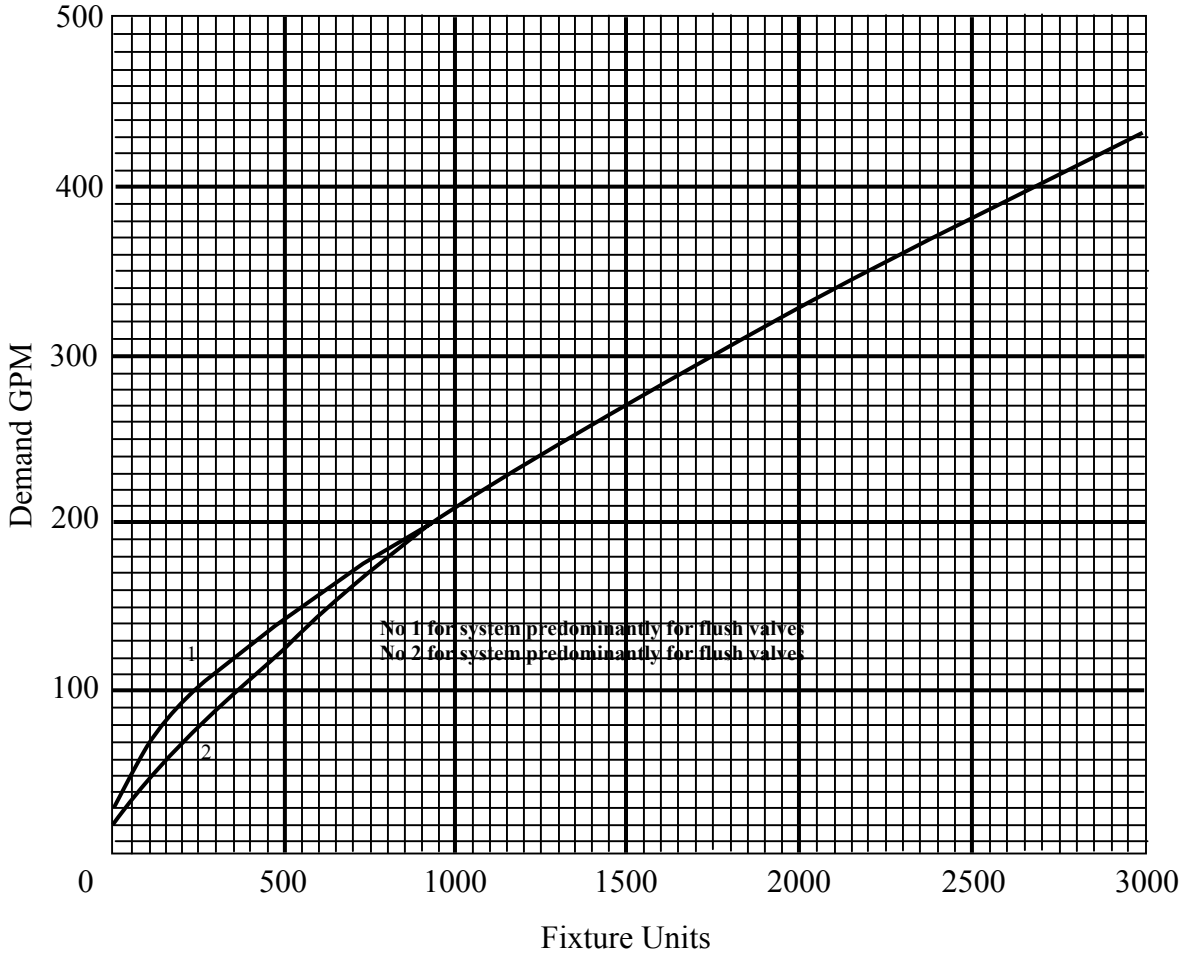
Demand GPM
500
400
300
200
100
0
500
1000
1500
2000
2500
3000
Fixture Units
No 1 for system predominantly for flush valves
No 2 for system predominantly for flush valves
1
2

Pressure Loss At Maximum Flow

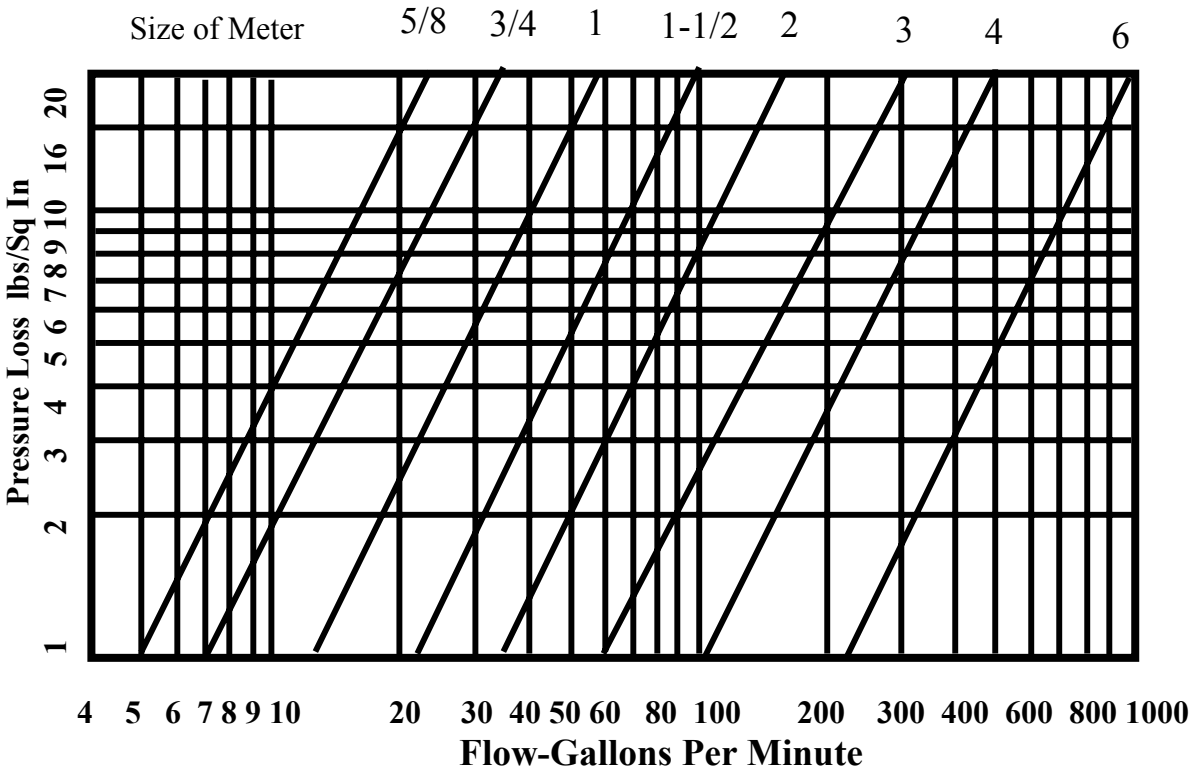

Check With The Water Purveyor For The Manufactures Published Pressure Loss

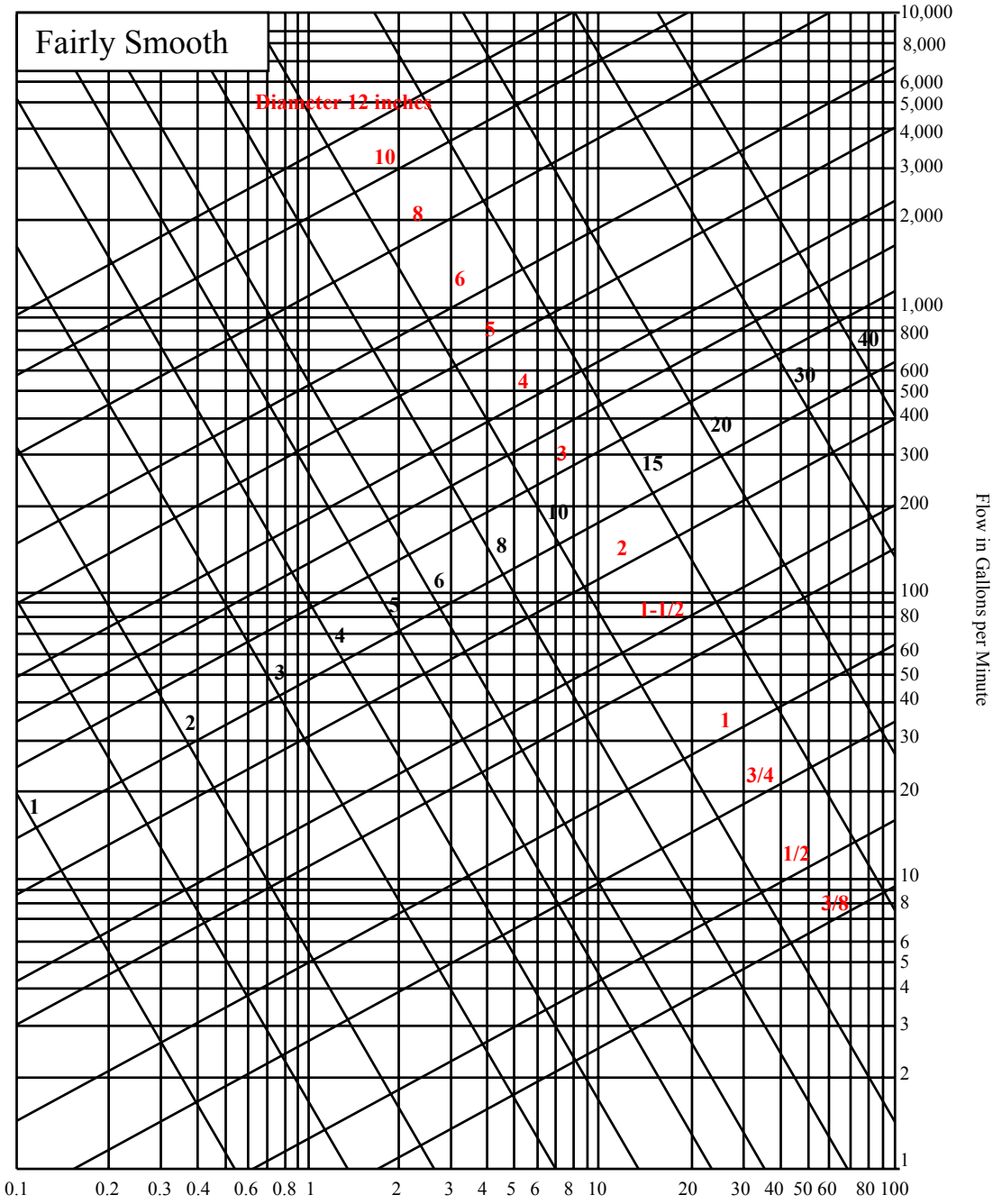
Fairly Smooth
Diameter 12 inches
10
8
6
5
4
3
2
1-1/2
1
3/4
1/2
3/8
40
30
20
15
10
8
6
5
4
3
2
1
10,000
8,000
6,000
5,000
4,000
3,000
2,000
1,000
800
600
500
400
300
200
100
80
60
50
40
30
20
10
8
6
5
4
3
2
1
0.1
0.2
0.3
0.4
0.6
0.8
1
2
3
4
5
6
8
10
20
30
40
50
60
80
100
Flow in Gallons per Minute
Friction Loss—Lbs. Per Square Inch Head per 100 Foot Length

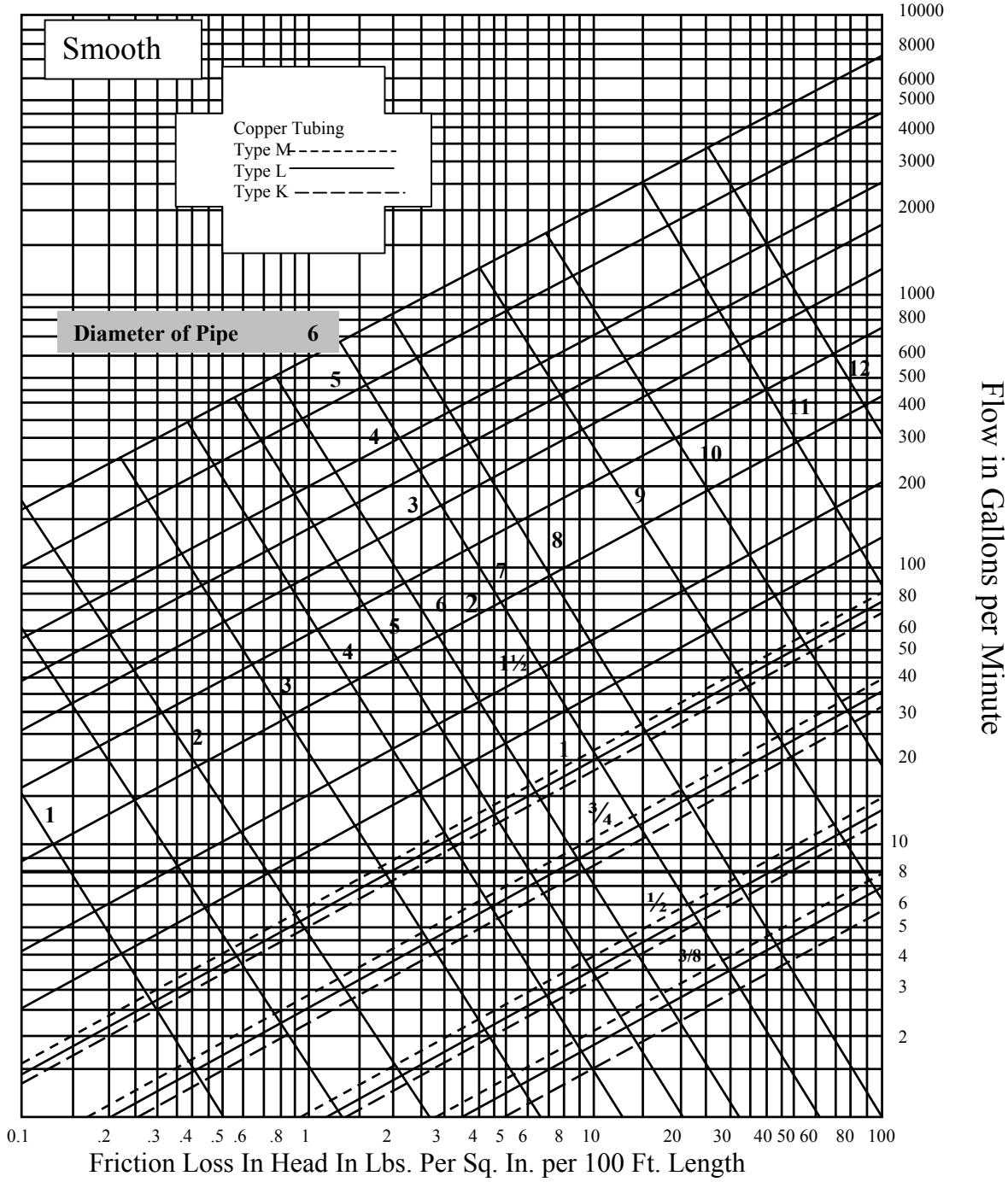
Smooth
Copper Tubing
Type M
Type L
Type K
Diameter of Pipe 6
5
4
3
2
1
12
11
10
9
8
7
6
5
4
3
2
1
1½
1
¾
½
3/8
10000
8000
6000
5000
4000
3000
2000
1000
800
600
500
400
300
200
100
80
60
50
40
30
20
10
8
6
5
4
3
2
0.1
.2
.3
.4
.5
.6
.8
1
2
3
4
5
6
8
10
20
30
40
50
60
80
100
Friction Loss In Head In Lbs. Per Sq. In. per 100 Ft. Length
Flow in Gallons per Minute

Omaha Plumbing Code
Figure 507(a)(1)

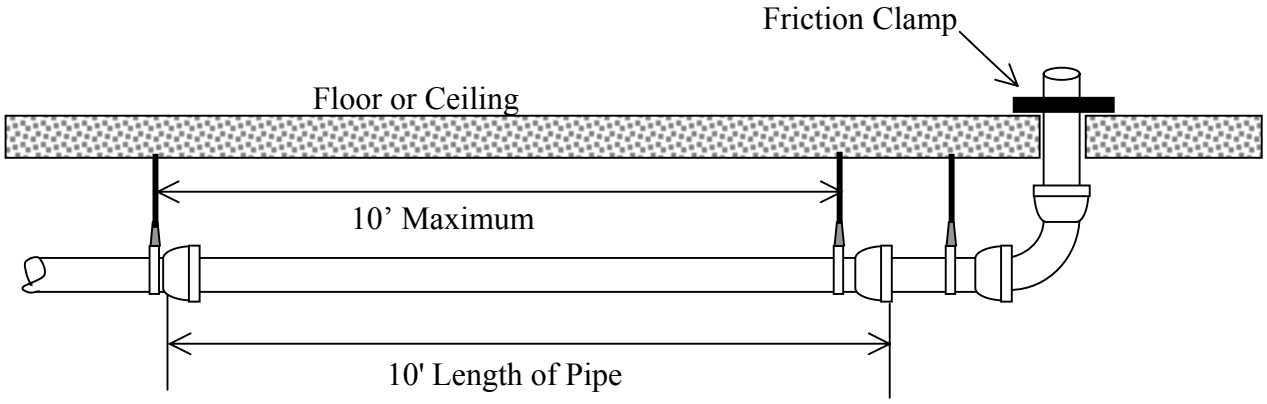

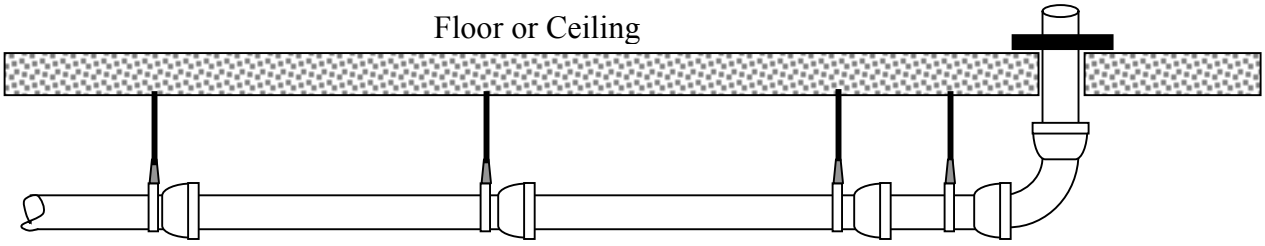

Omaha Plumbing Code
Figure 507(a)(2)

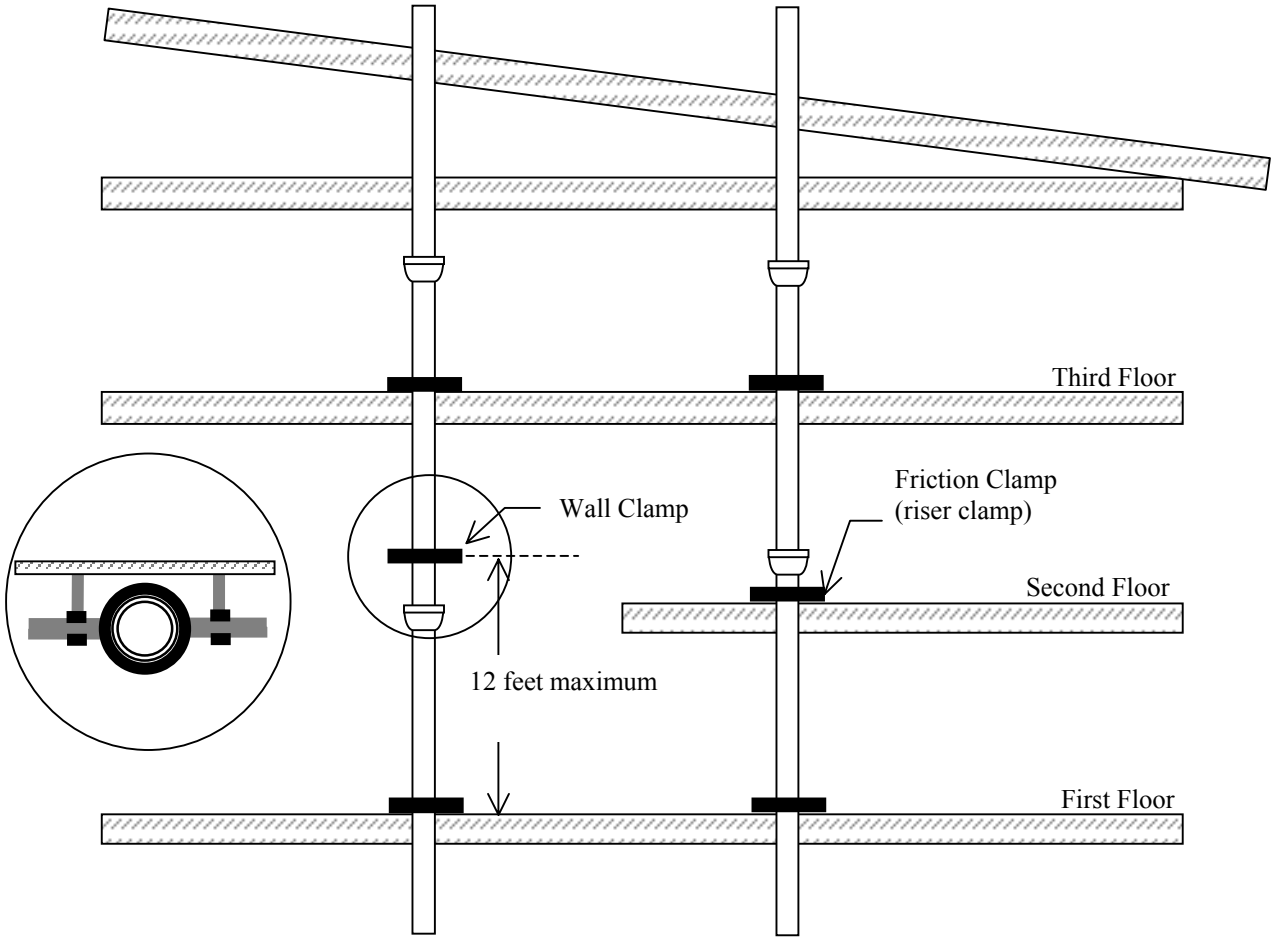

Omaha Plumbing Code
Figure 507(b)(1)-1

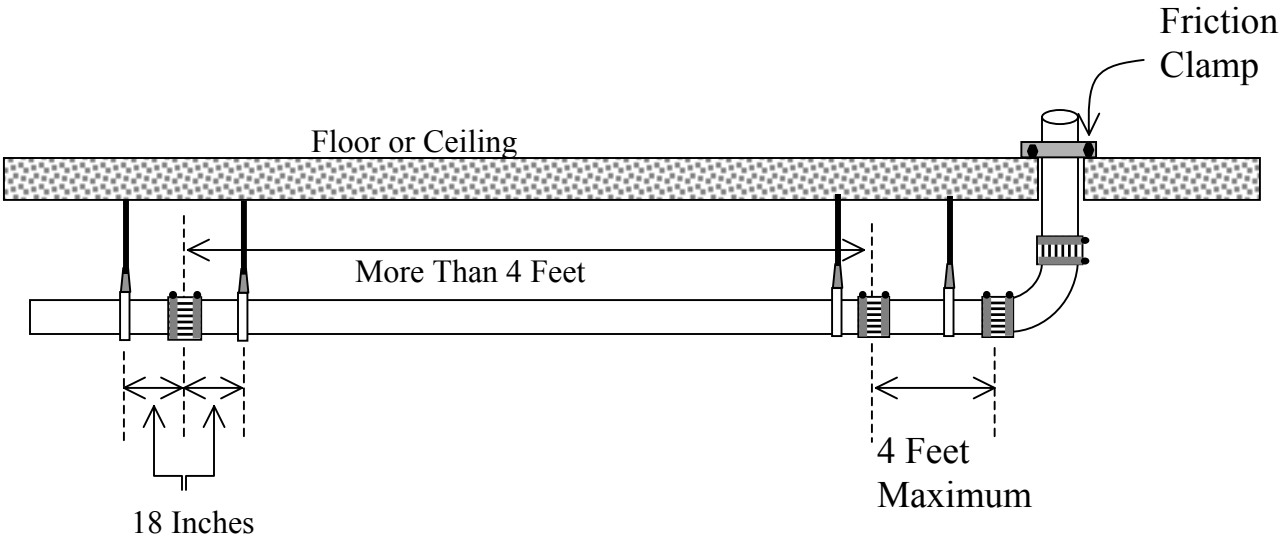

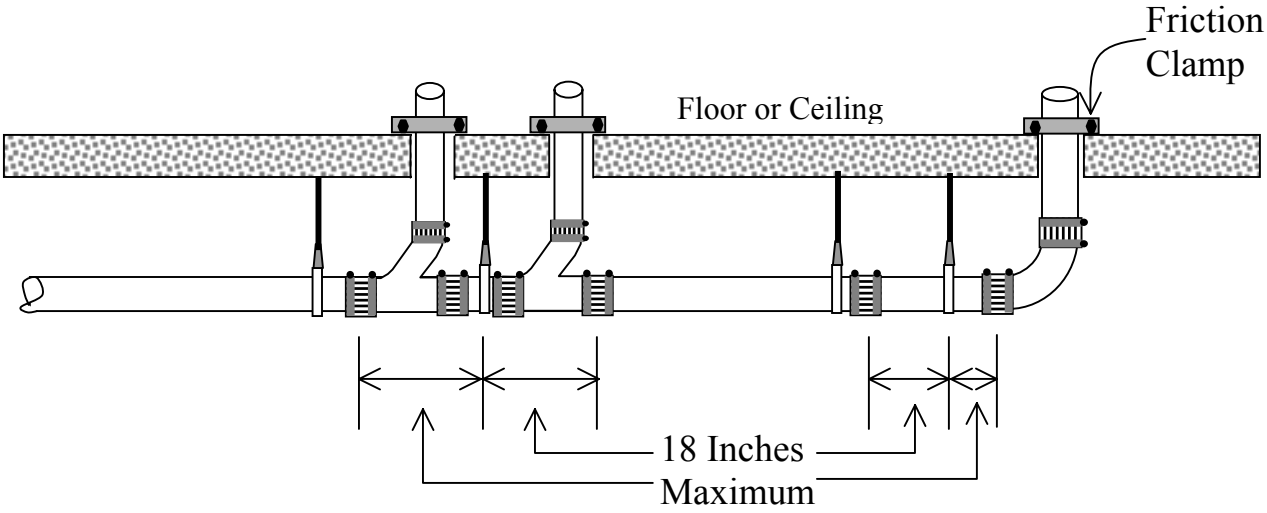

Omaha Plumbing Code
Figure 507(a)(1)-2

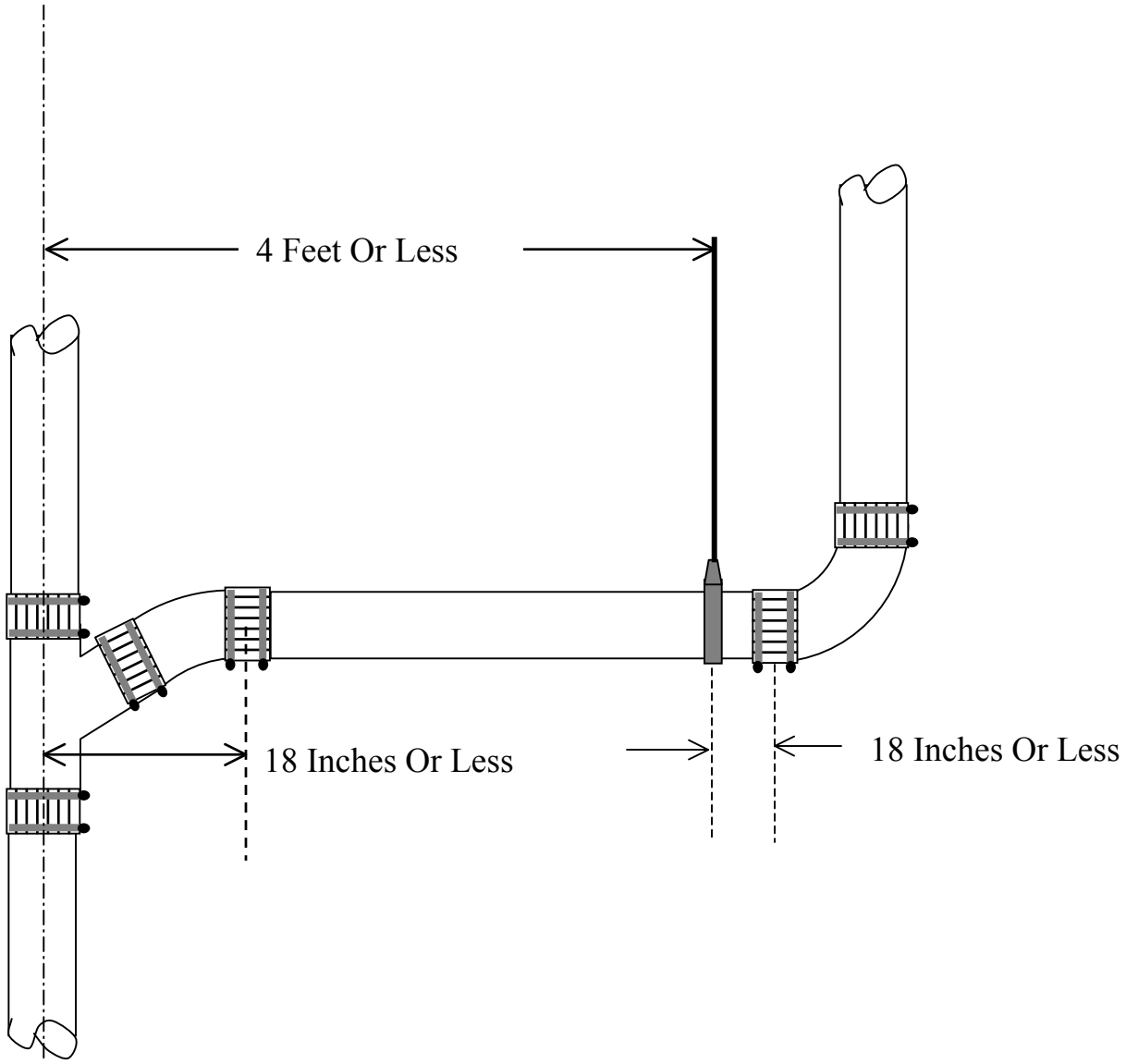

Omaha Plumbing Code
Figure 507(a)(3)

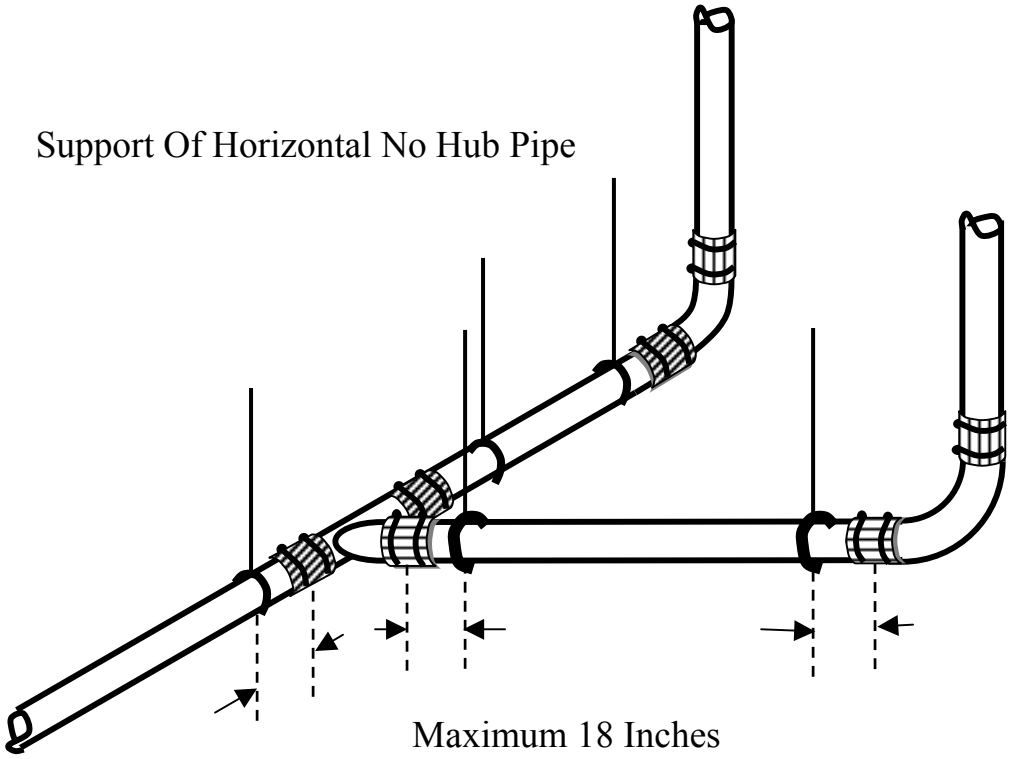

Omaha Plumbing Code
Figure 507(b)(2)

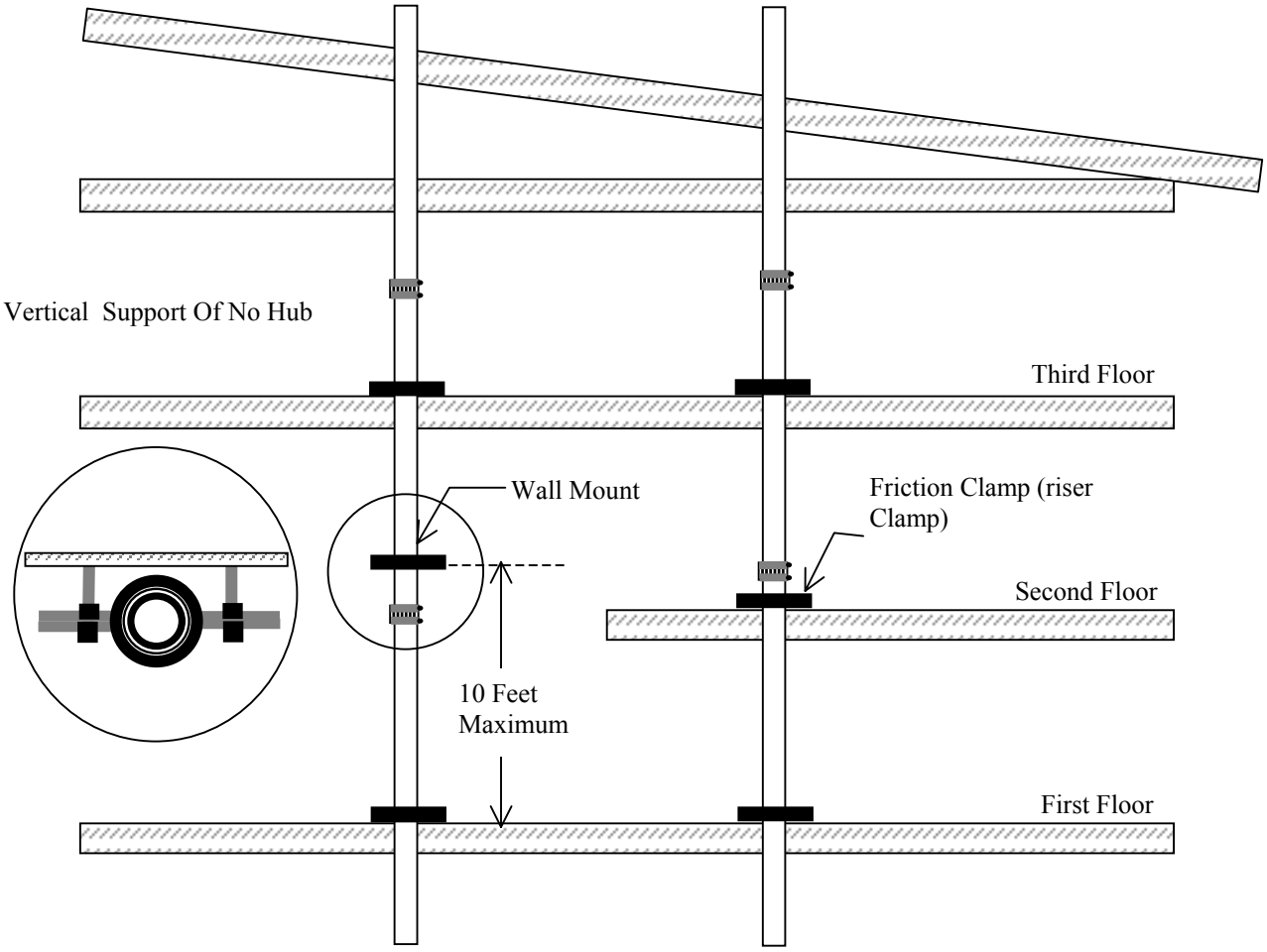

Omaha Plumbing Code
Figure 507(e)(1)

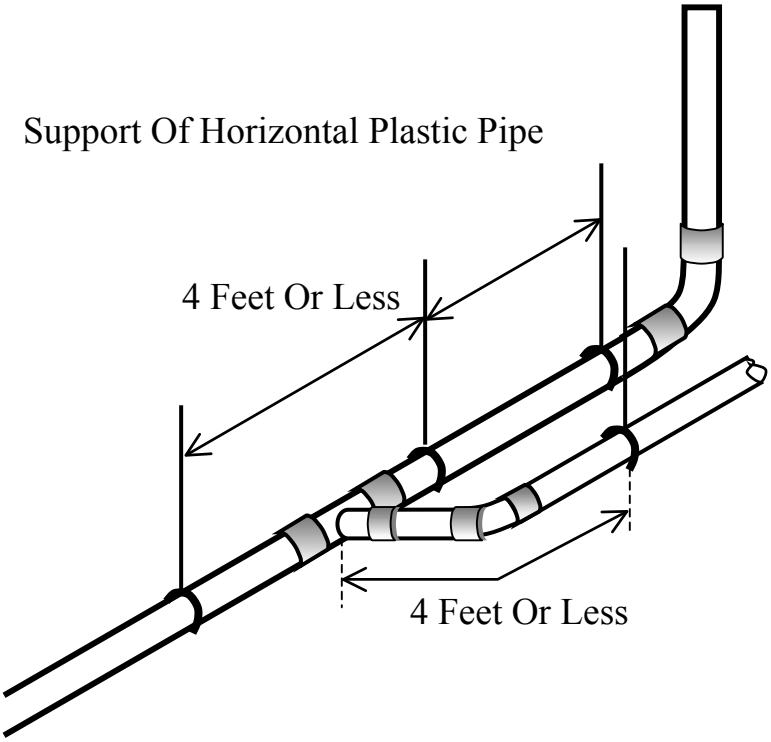

Omaha Plumbing Code
Figure 507(e)(2)-1

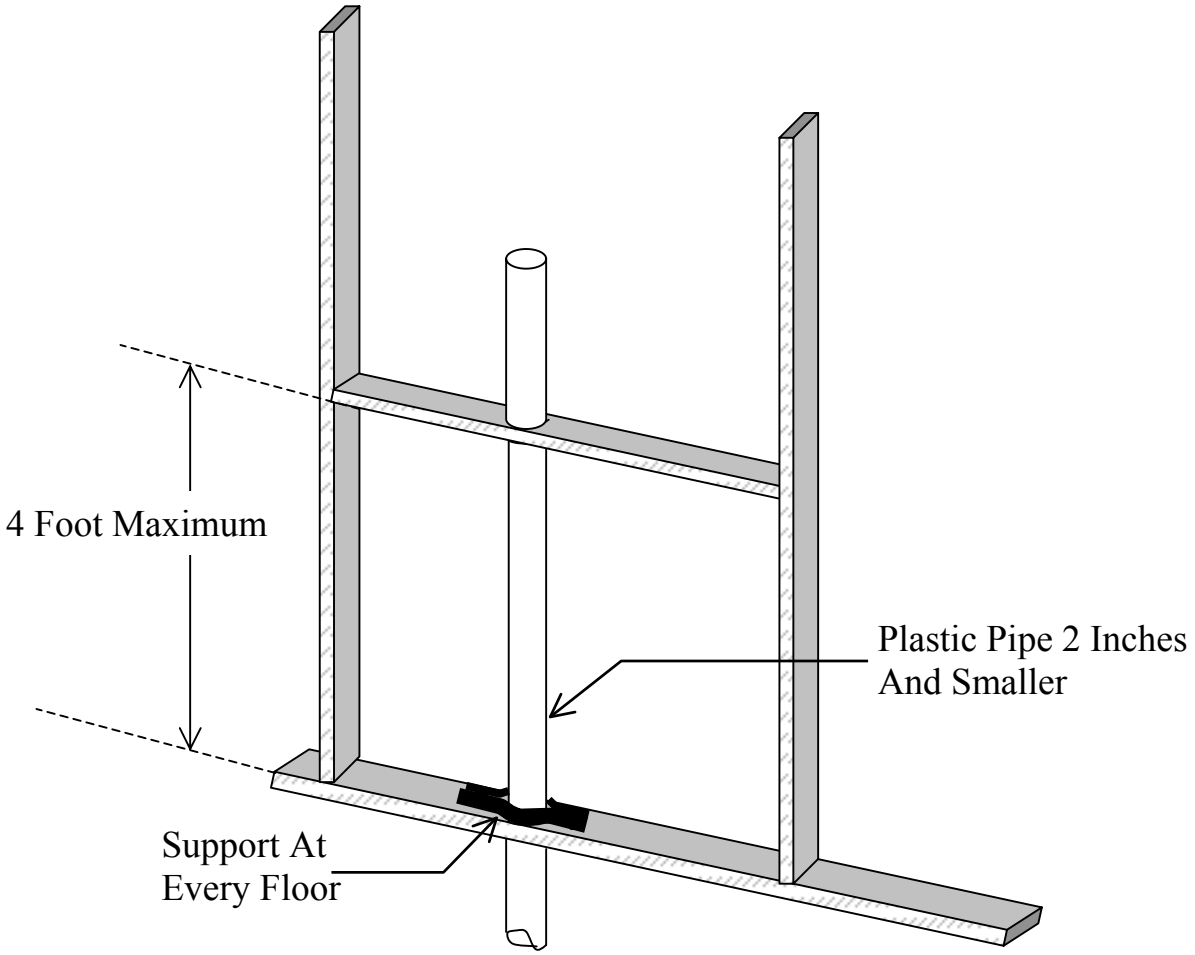

Omaha Plumbing Code
Figure 507(e)(2)-2

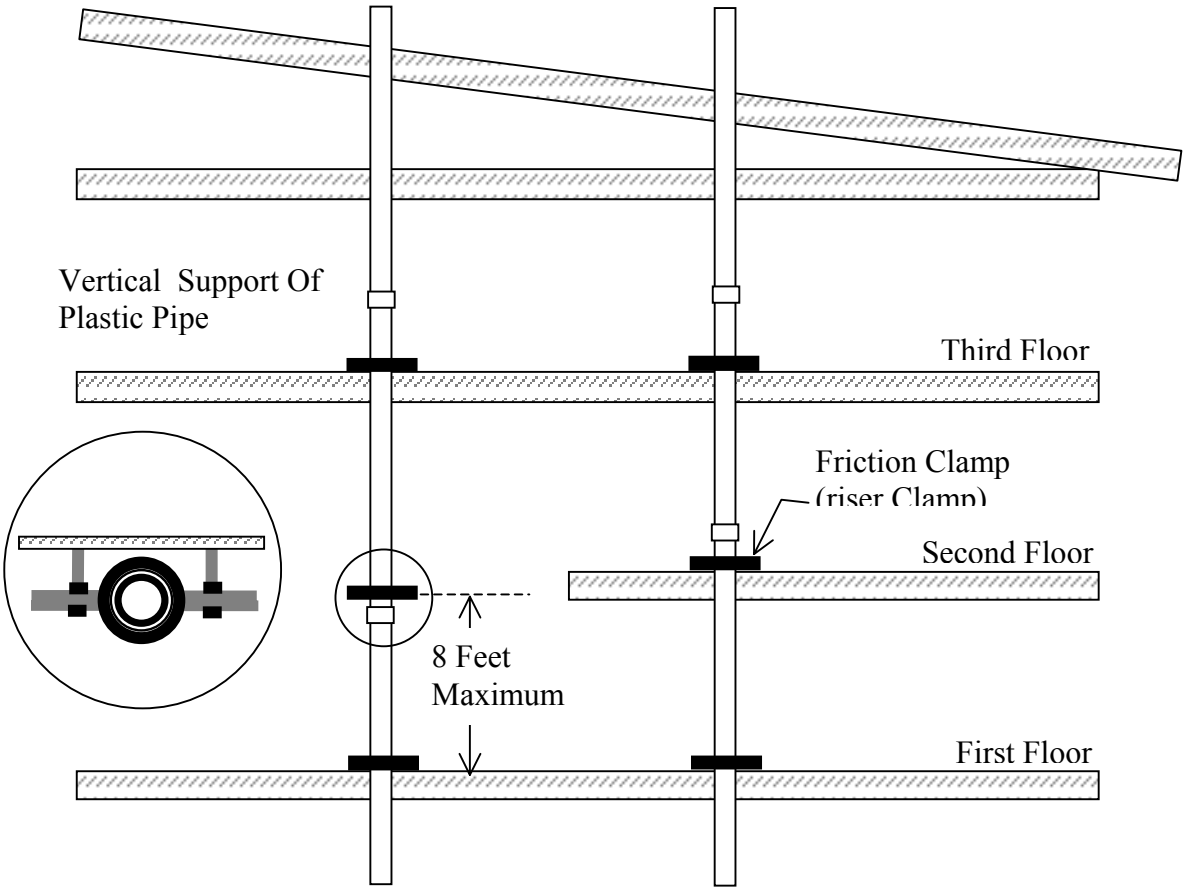

Omaha Plumbing Code
Figure 512(a)

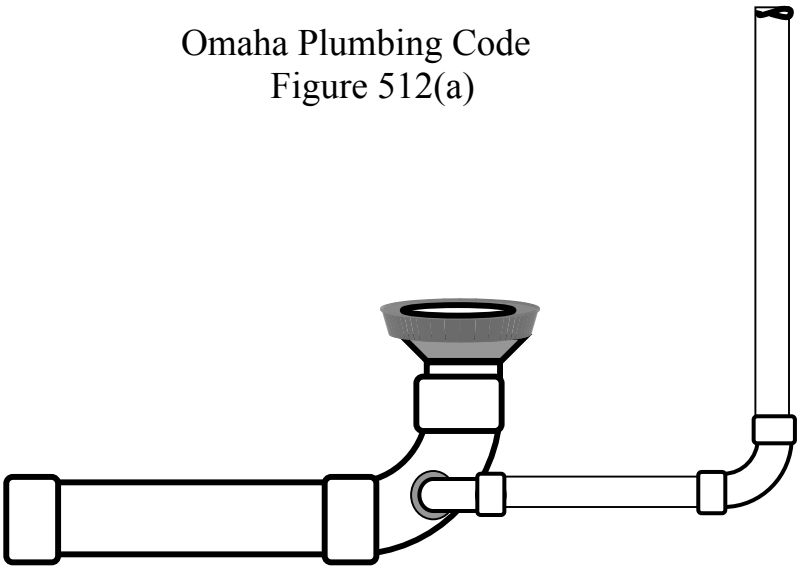

Omaha Plumping Code
Figure 512(c)

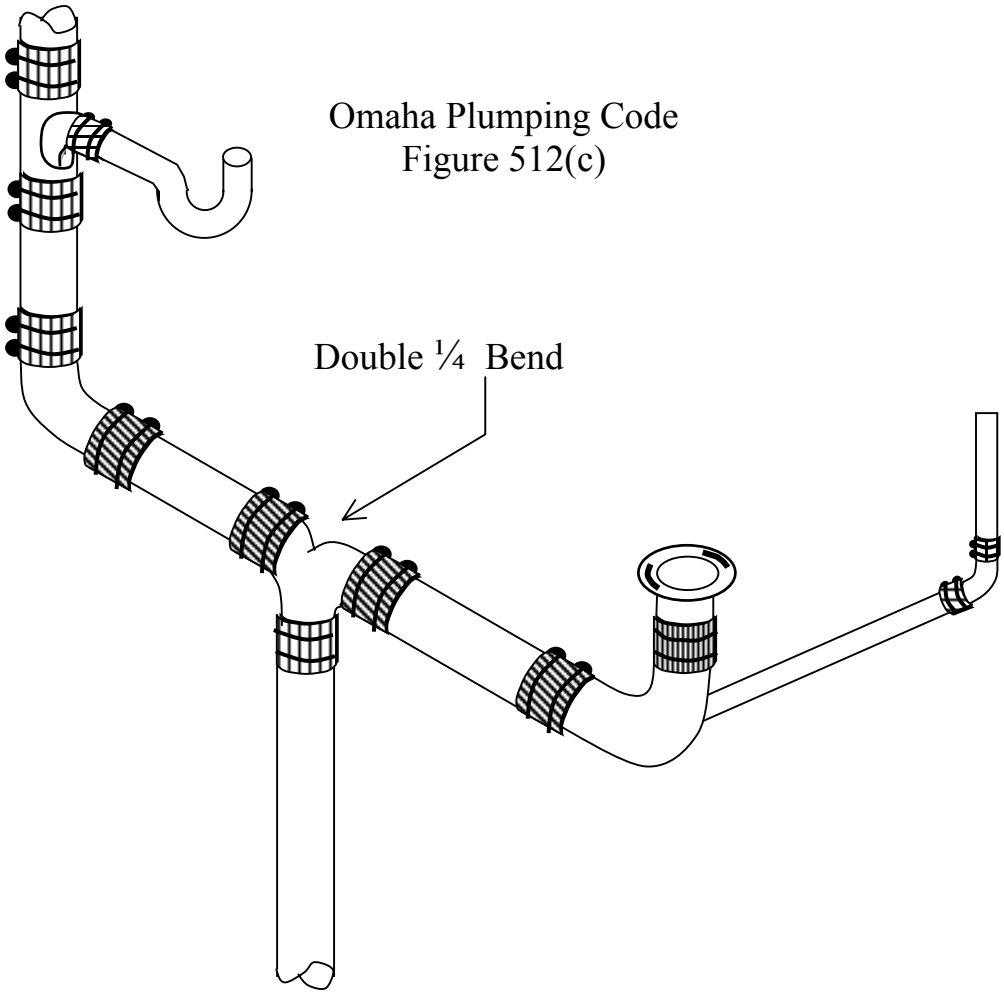

Omaha Plumbing Code
Figure 514

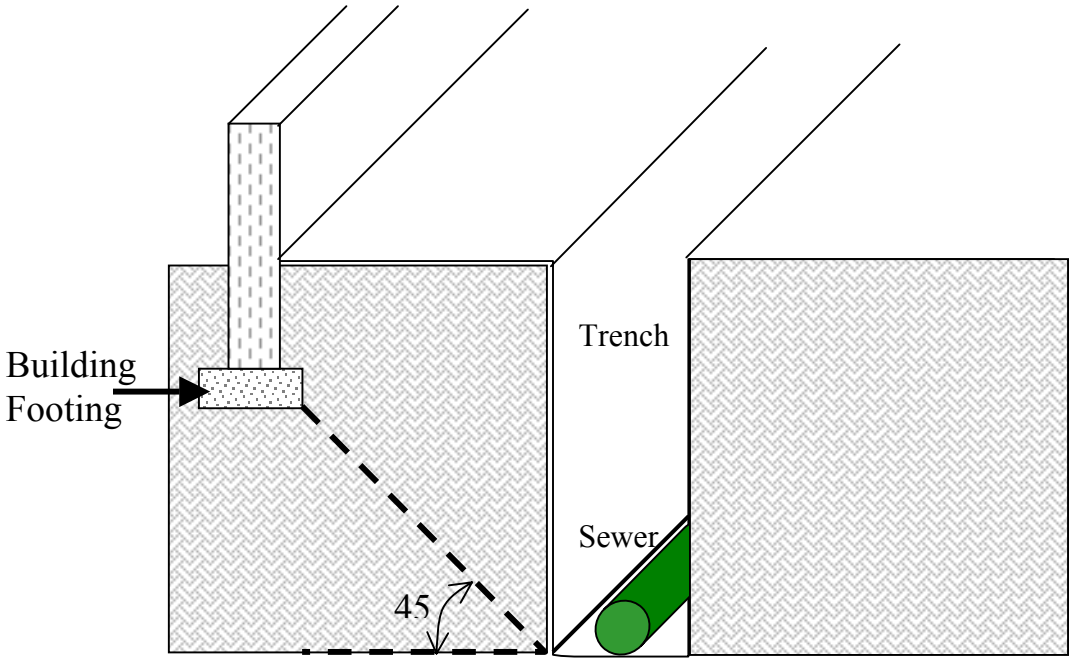

Omaha Plumbing Code
Figure 520(a)

Dedicated Space

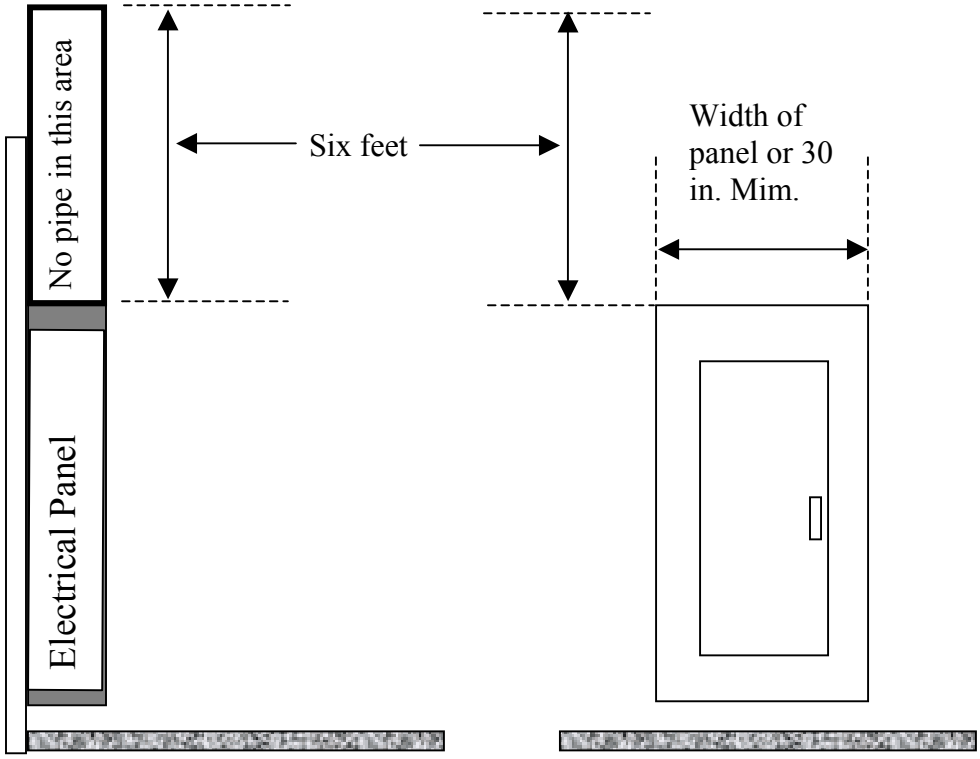

Omaha Plumbing Code
Figure 520(b)

Working Space

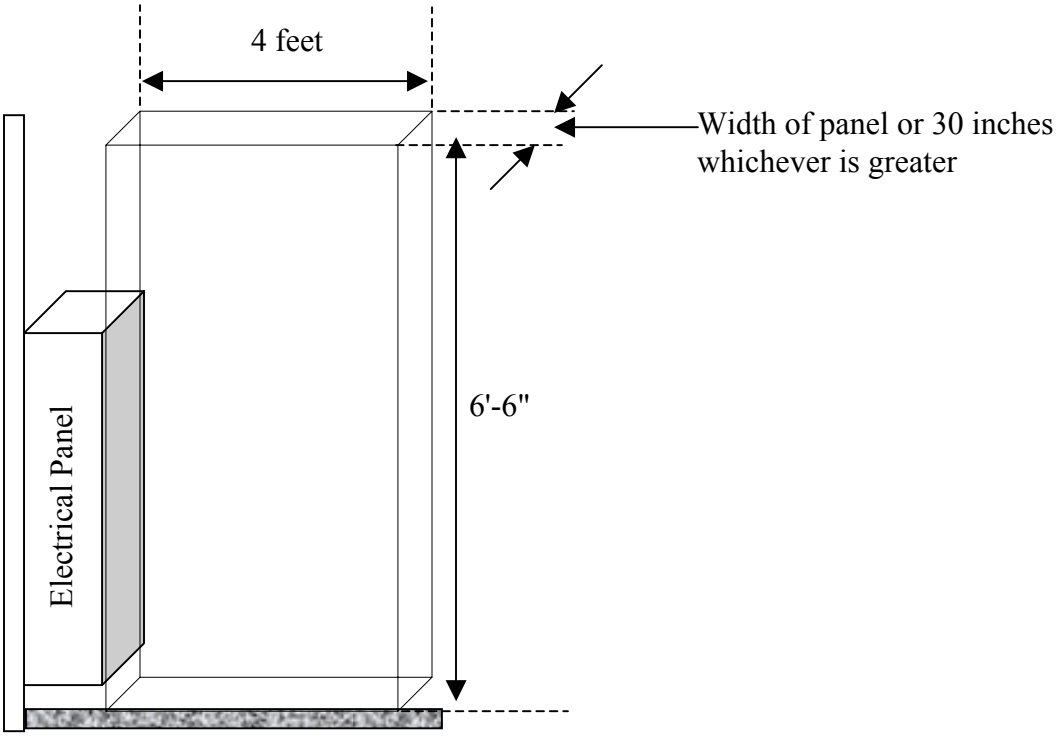

Omaha Plumbing Code
Figure 605(c)-1

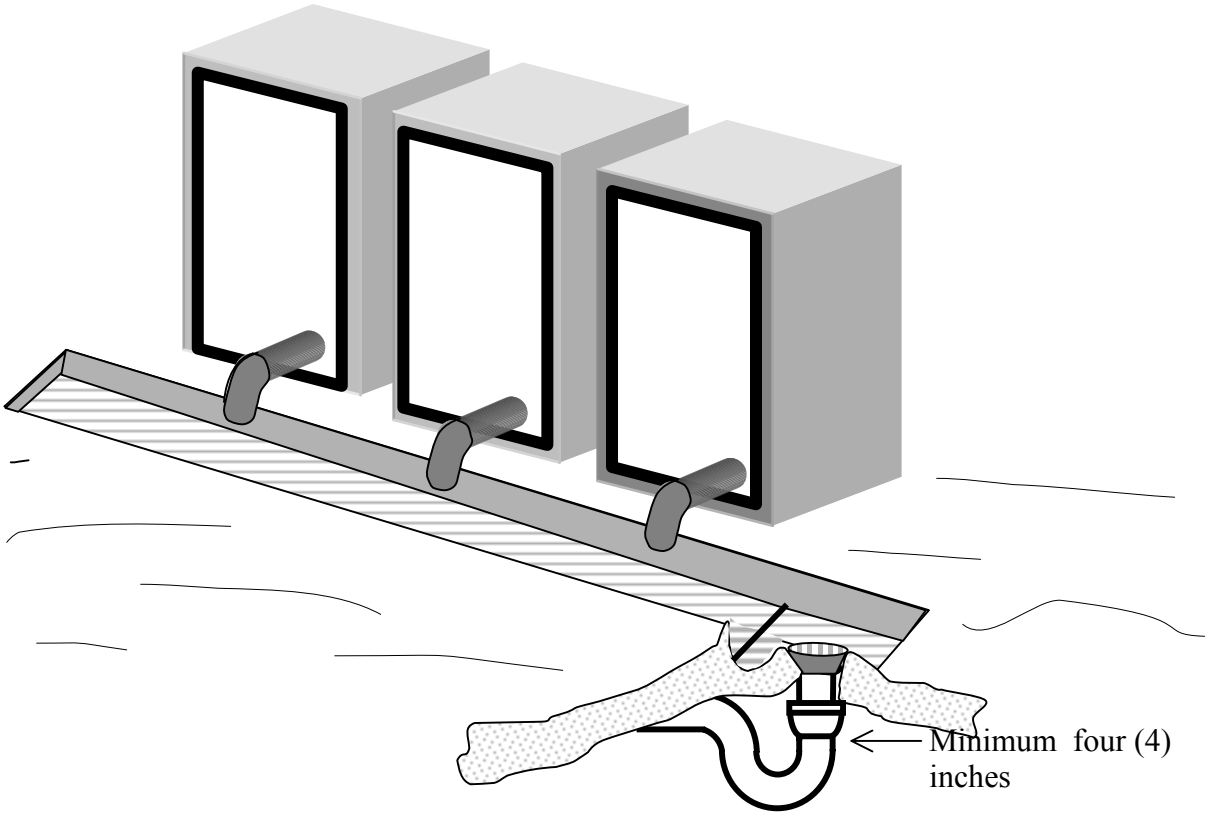

Trench to be sized to hold two-thirds of the volume of the combine discharge of the washers

Omaha Plumbing Code
Figure 605(c)(2)

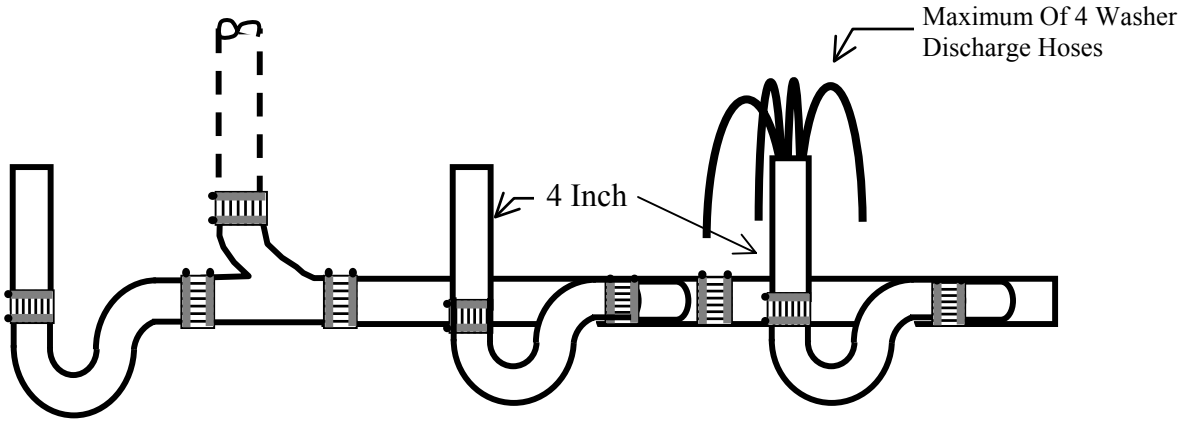

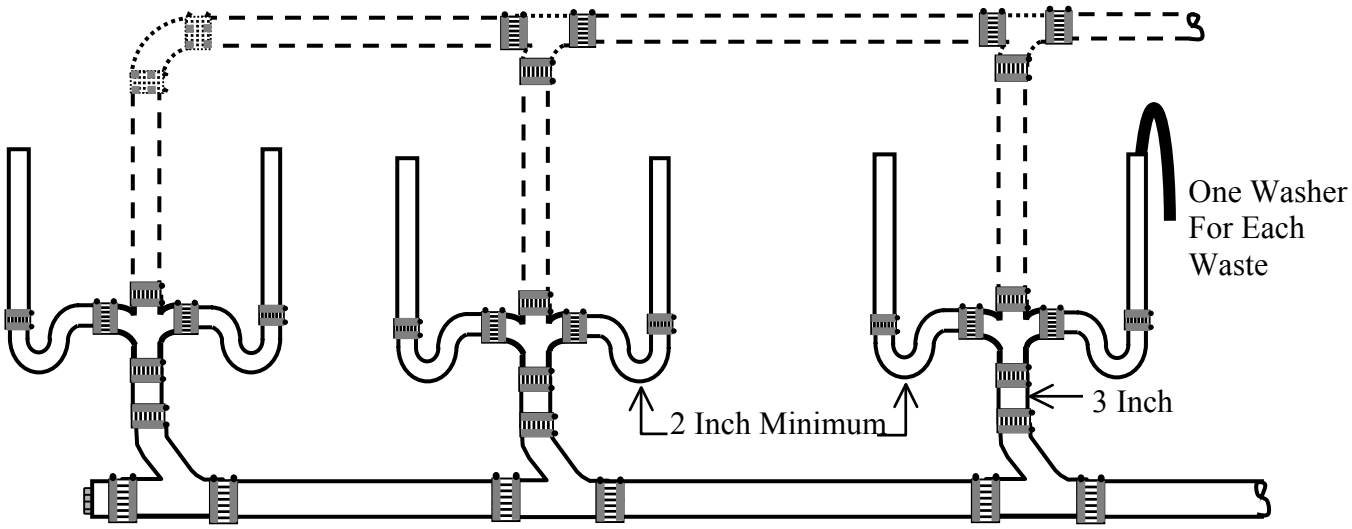

Omaha Plumbing Code
Figure 608(a)(2)

Residential Dishwashing
Machine Waste Connection

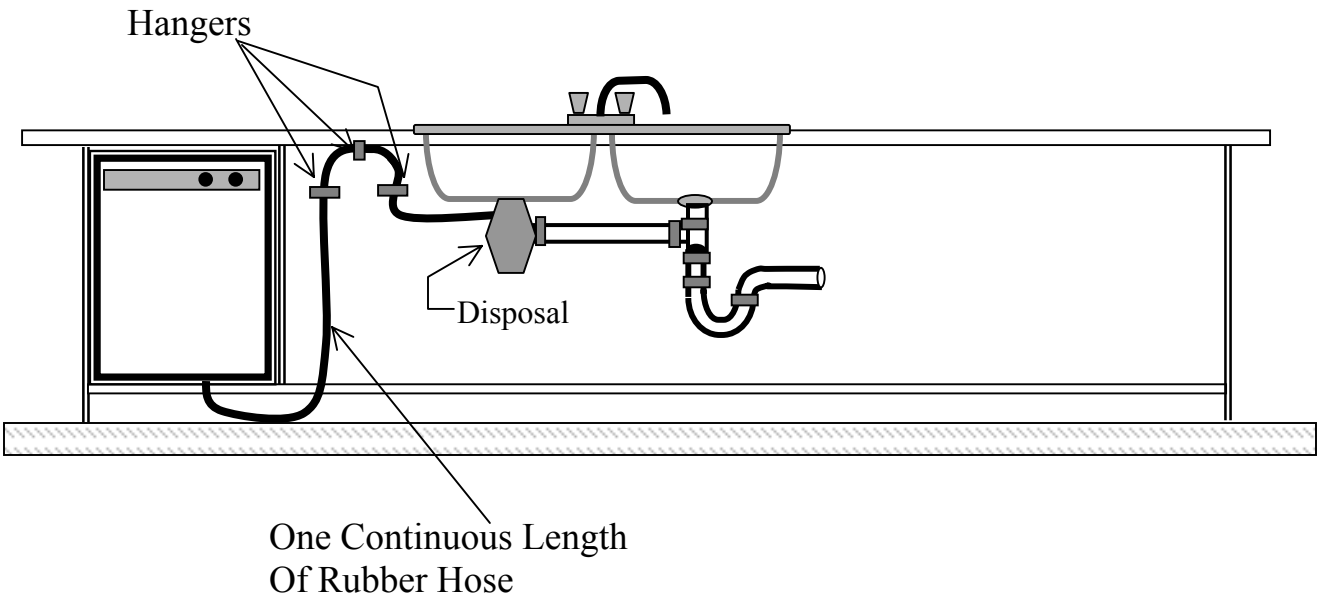

Omaha Plumbing Code
Figure 608(a)(7)

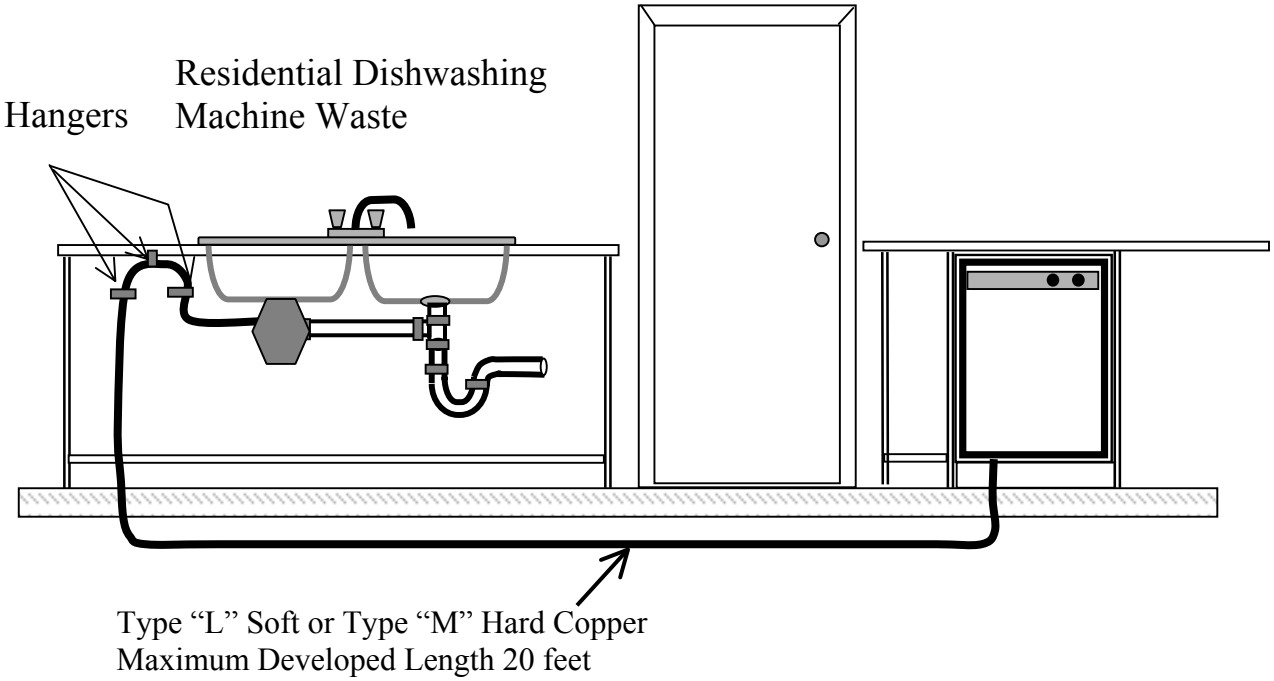

Omaha Plumbing Code
Figure 608(b)(2)

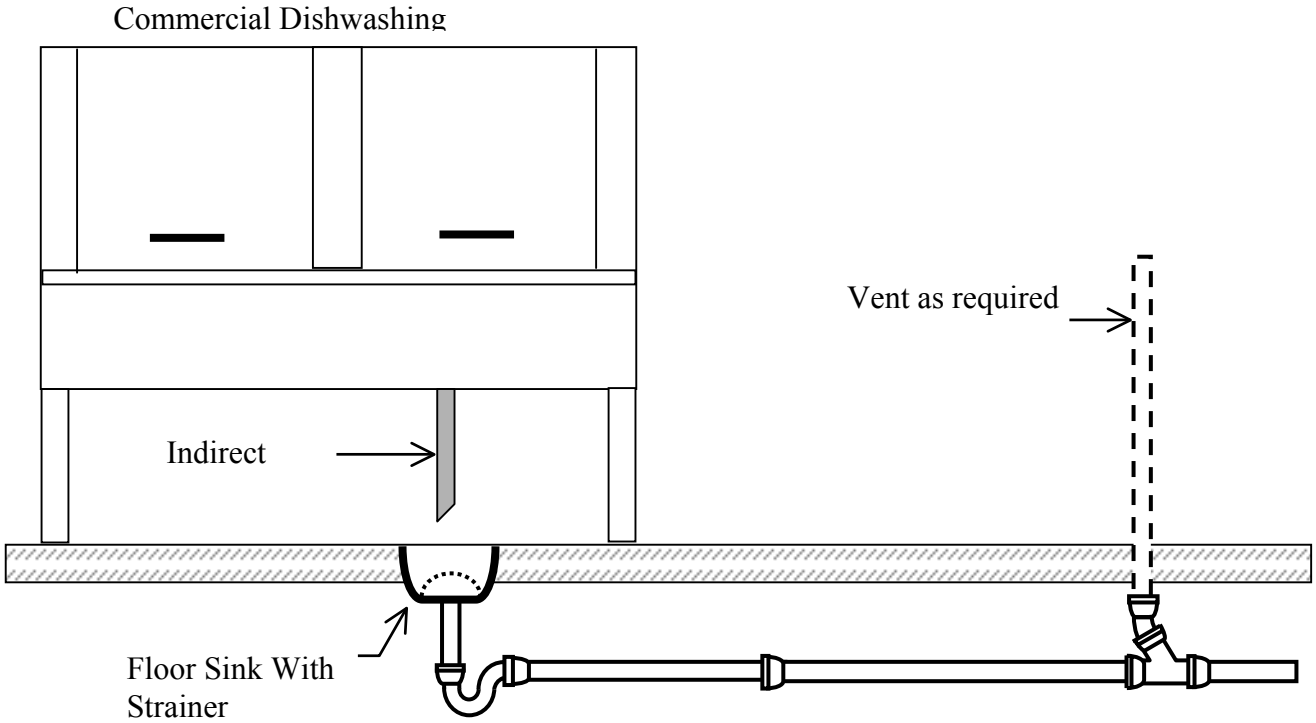

Omaha Plumbing Code
Figure 613(c)

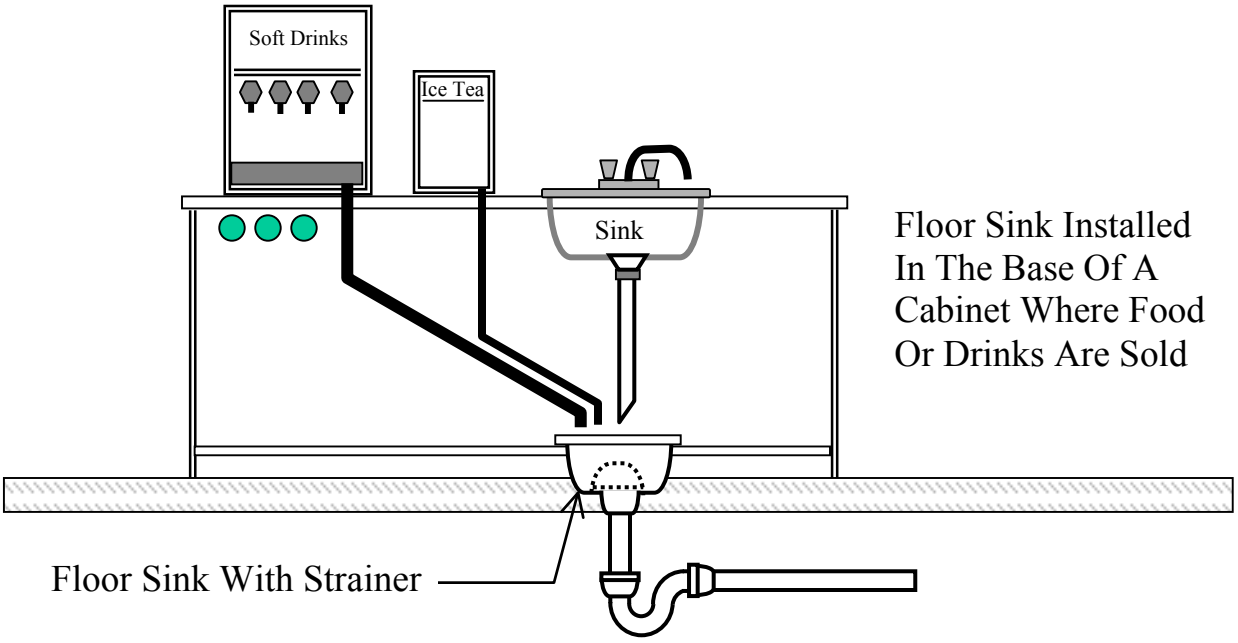

Omaha Plumbing Code
Figure 637(a)(1)

Twenty-one by twenty-one (21 x 21) inches of clearance in front of the fixture.

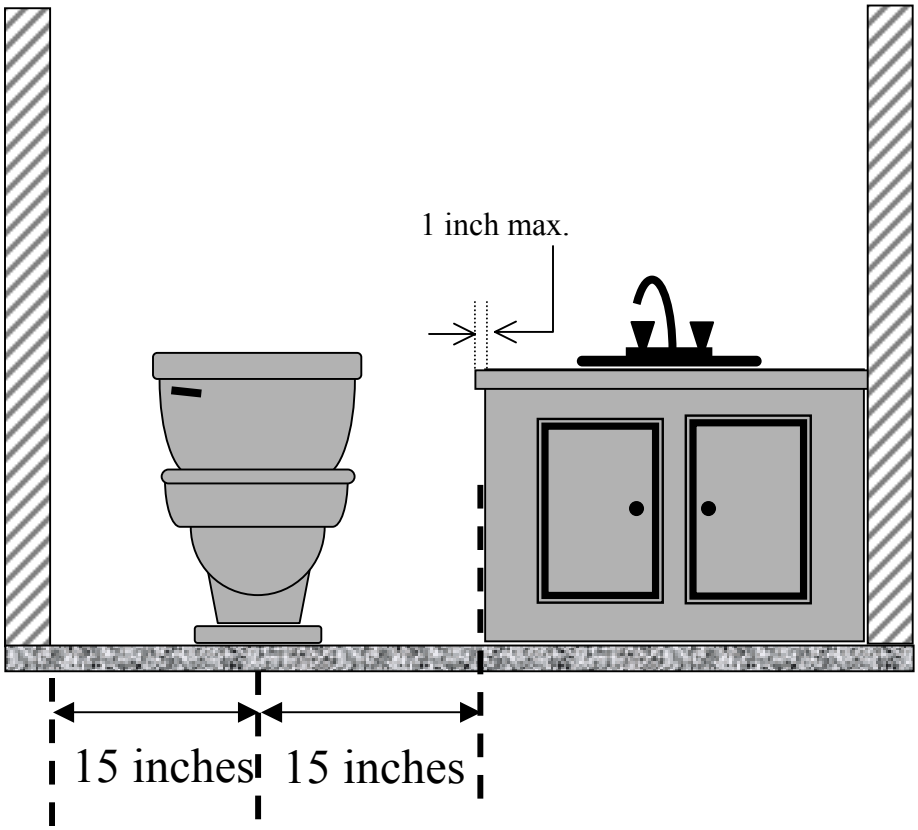

Omaha Plumbing Code
Figure 637(a)(2)

Twenty-one by twenty-one (21 x 21) inches of clearance in front of the fixture.

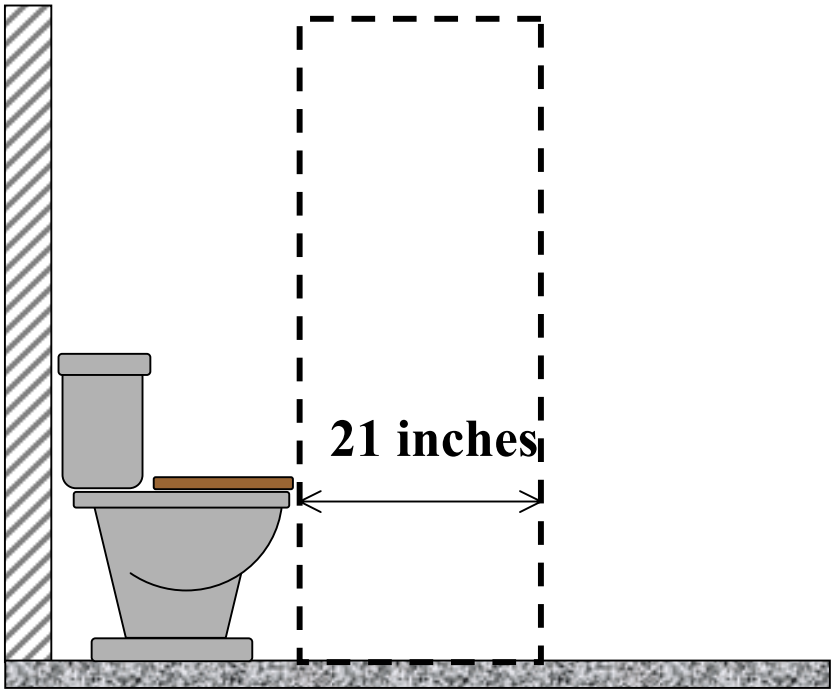

Omaha Plumbing Code
Figure 637(a)(2)

Thirty-one (31) inches from the center of one water closet to the center of any other water closet or urinal.

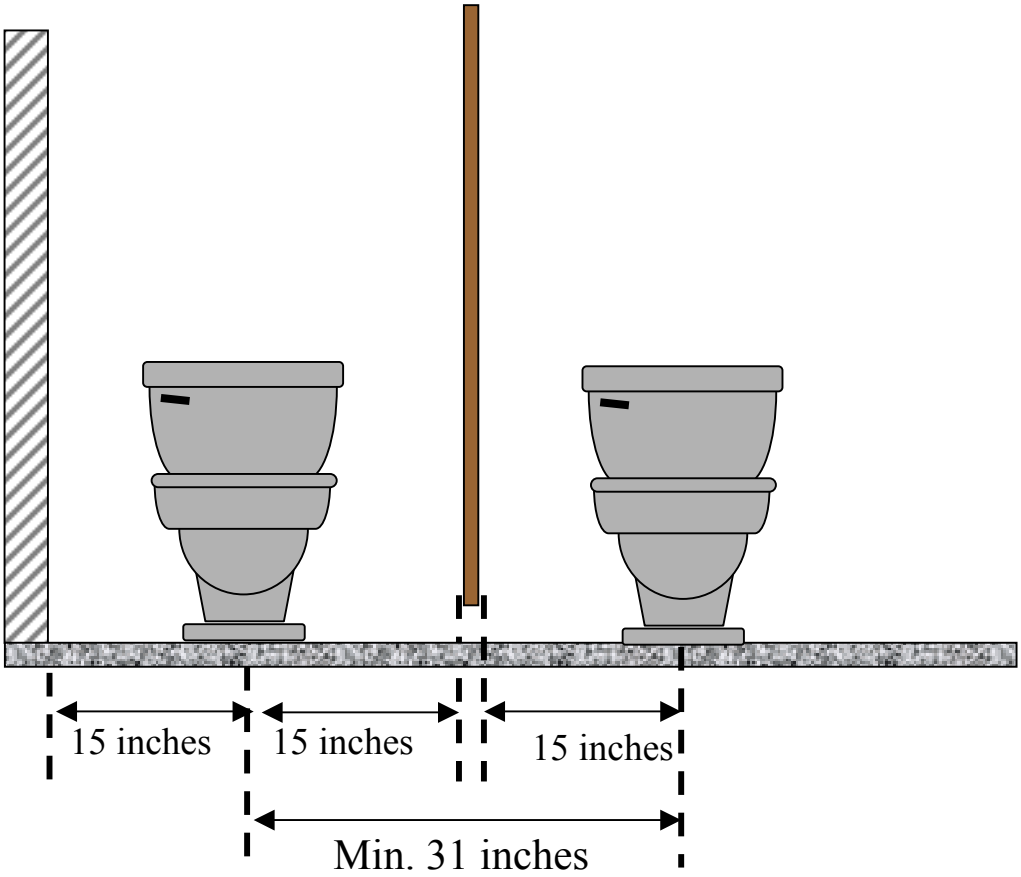

Omaha Plumbing Code
Figure 637(a)(4)

The minimum size stall or compartment shall be thirty (30) inches in width and sixth (60) inches in length.

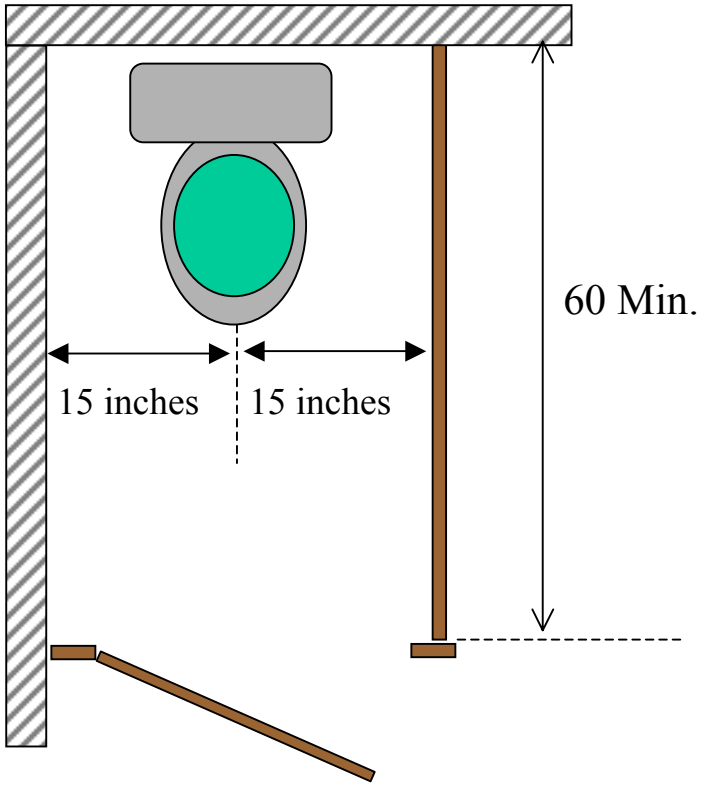

Omaha Plumbing Code
Figure 637(a)(5)

There shall be a minimum of four inches between a water closet and a lavatory.

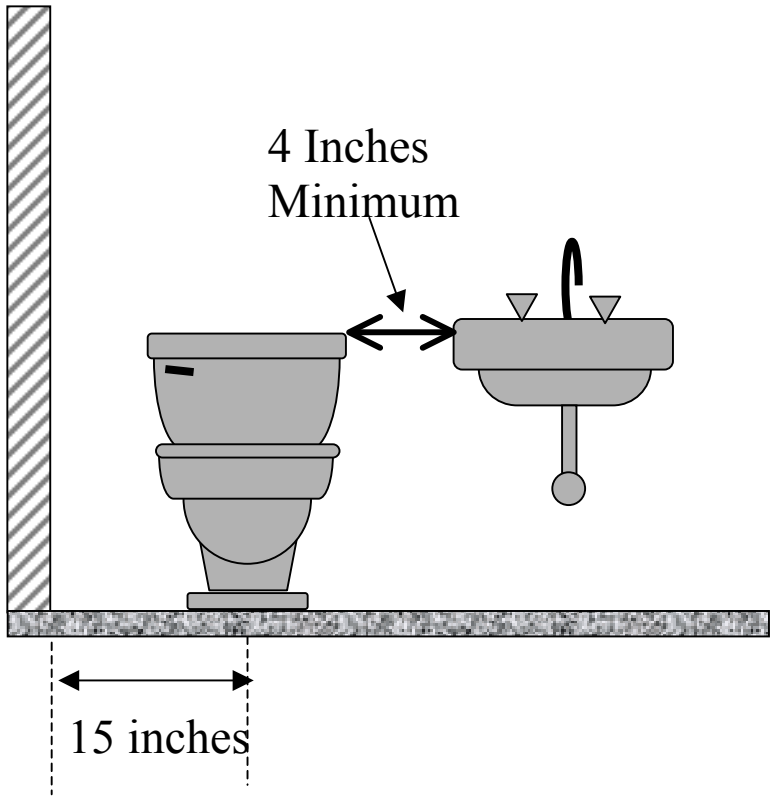

Omaha Plumbing Code
Figure 637(b)(1)

There shall be 15 inches from the center of the urinal to any wall or partition. In no case shall there be less than four inches from the wall and the side of the urinal as measured from the widest point of the urinal.

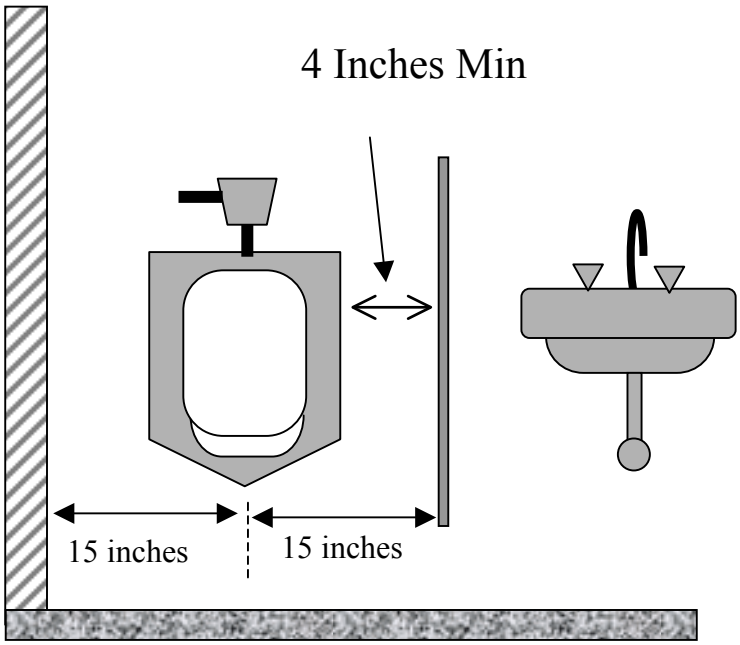

Omaha Plumbing Code
Figure 637(b)(2)

There shall be thirty inches from the center of one urinal to the center of any other urinal or water closet.

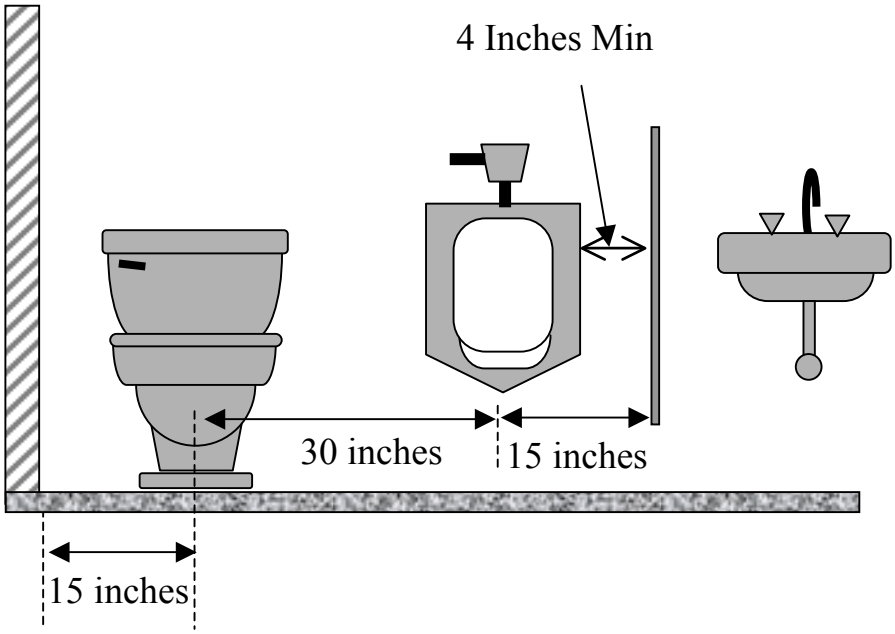

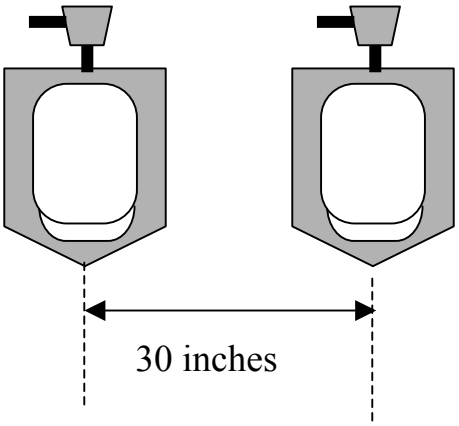

Omaha Plumbing Code
Figure 637(b)(3)

There shall be a 21-inch clearance in front of any wall or floor urinal and 18-inches clearance in front of pedestal urinals.

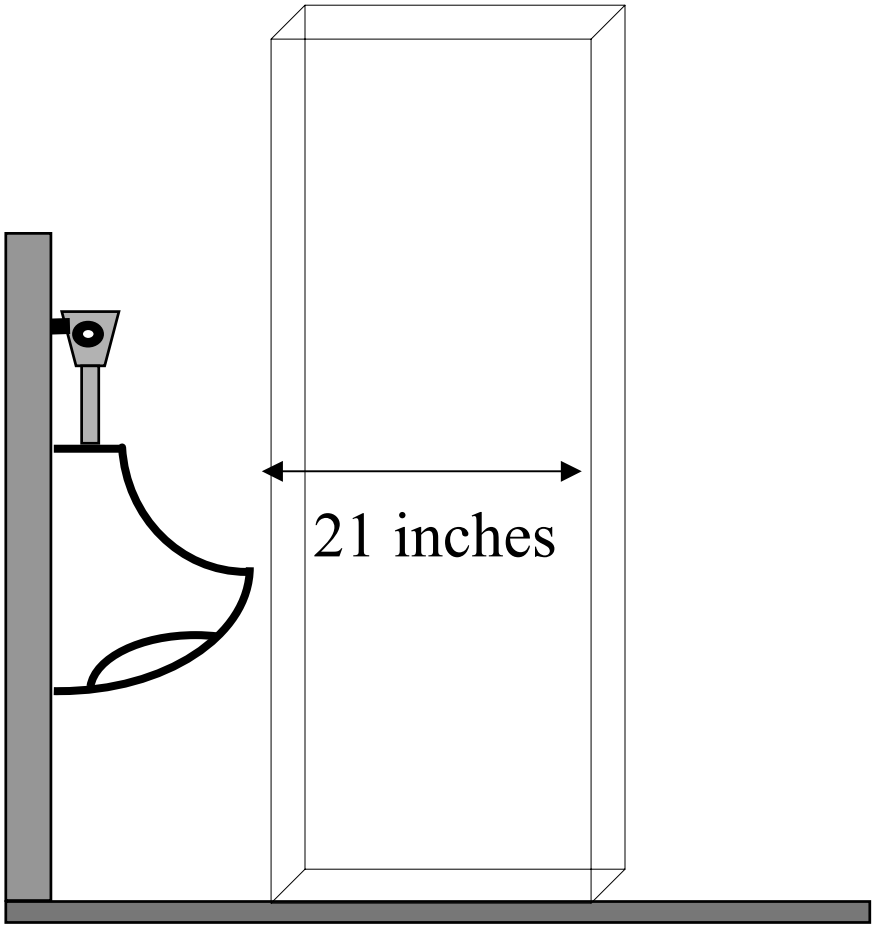

Omaha Plumbing Code
Figure 637(c)(1)

There shall be a minimum four (4) inches from the side or outer edge of each lavatory to any wall or partition.

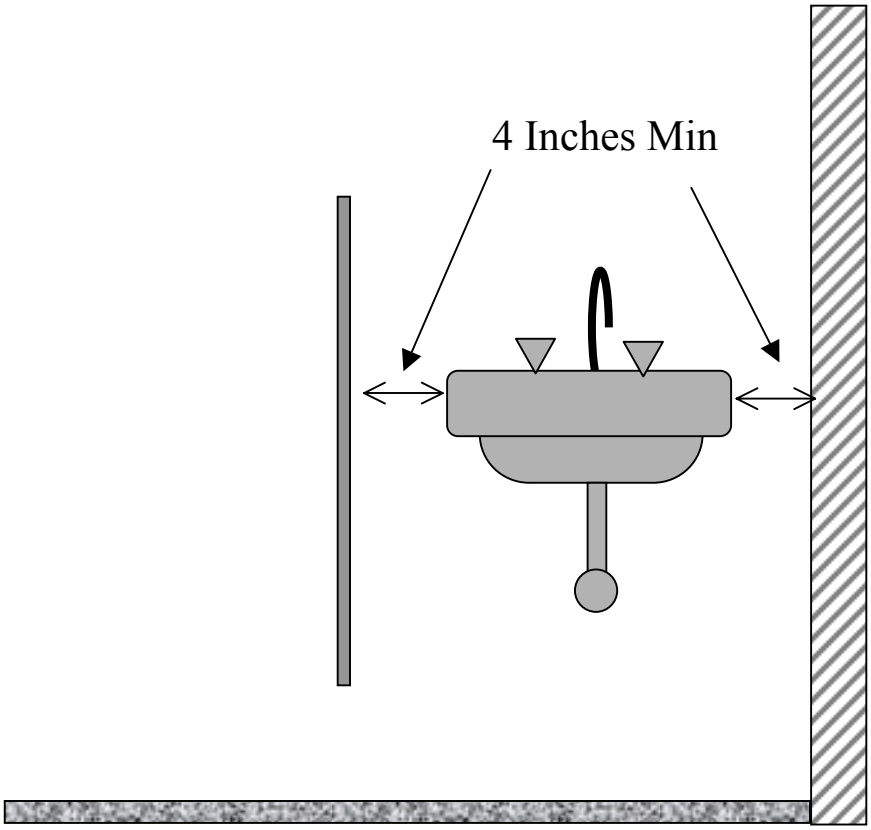

Omaha Plumbing Code
Figure 637(c)(2)

There shall be a minimum four inches from the side or outer edge of each lavatory to any other lavatory, water closet or tub.

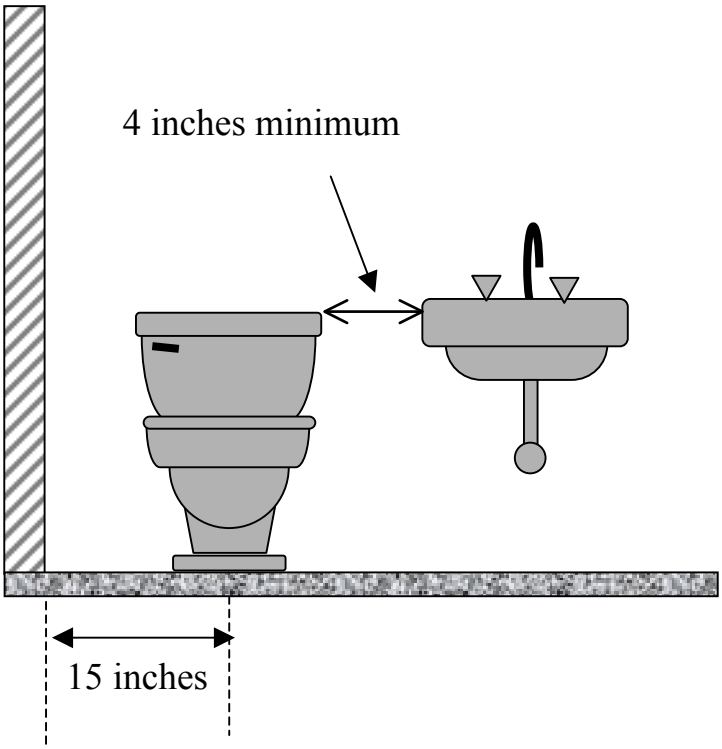

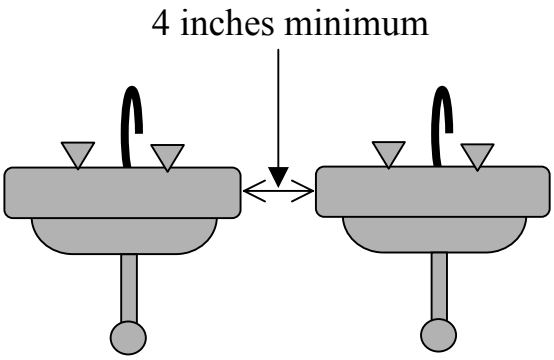

Omaha Plumbing Code
Figure 637(c)(3)

There shall be a clear floor space of twenty-one by twenty-one (21 x 21) inches in front of each lavatory.

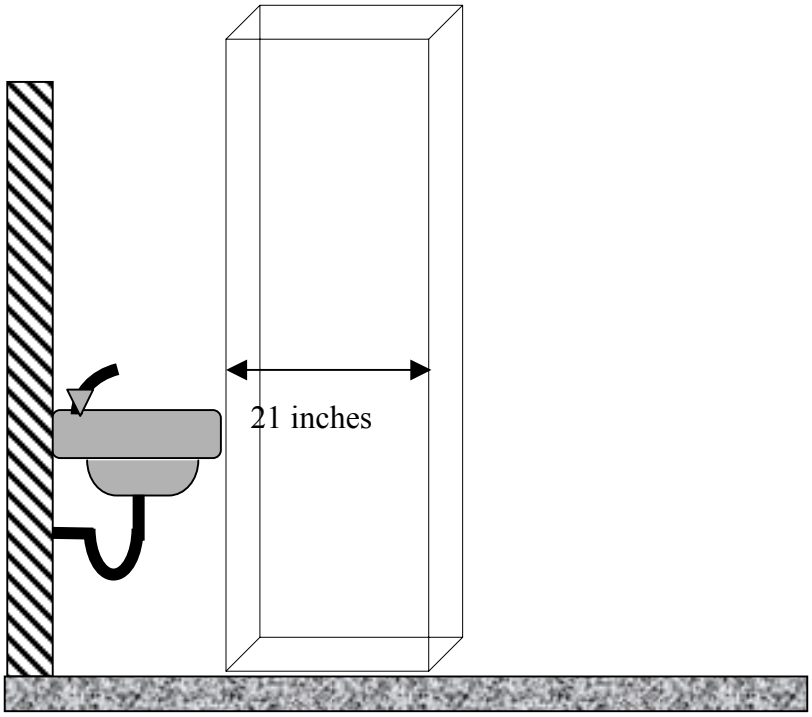

Omaha Plumbing Code
Figure 637(d)(1)

The minimum shower inside measurements shall be thirty by thirty (30 x 30) inches.

There shall a clear floor space of twenty-four by twenty-four (24 x 24) inches in front of the opening.

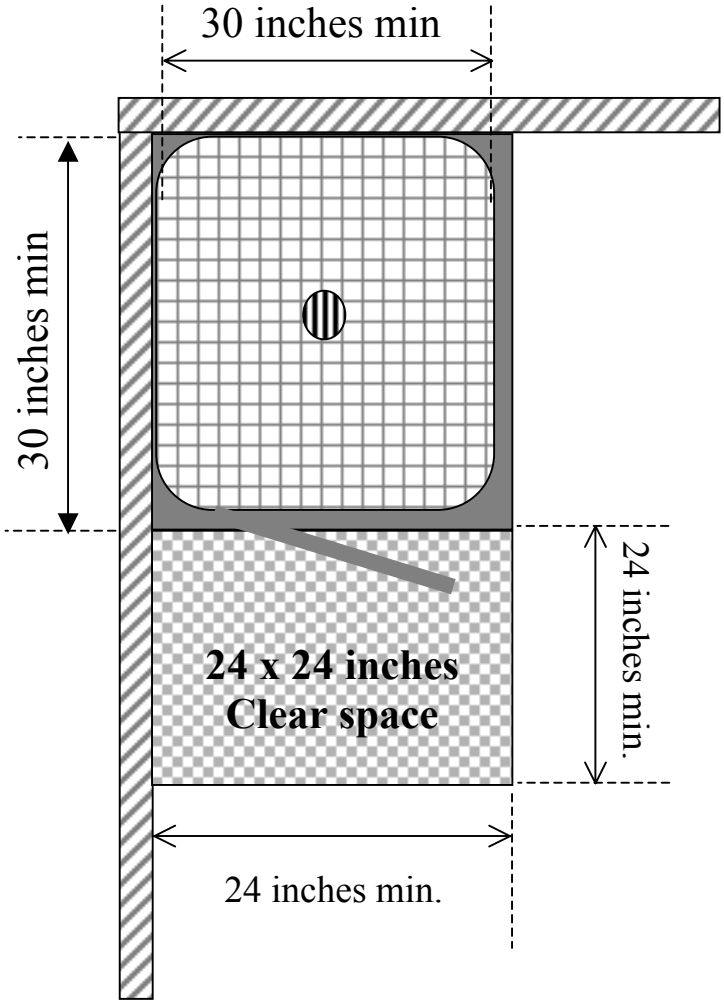

Omaha Plumbing Code
Figure 637(e)(1)

There shall be a minimum 21-inch clearance for entering or exiting of the tub.

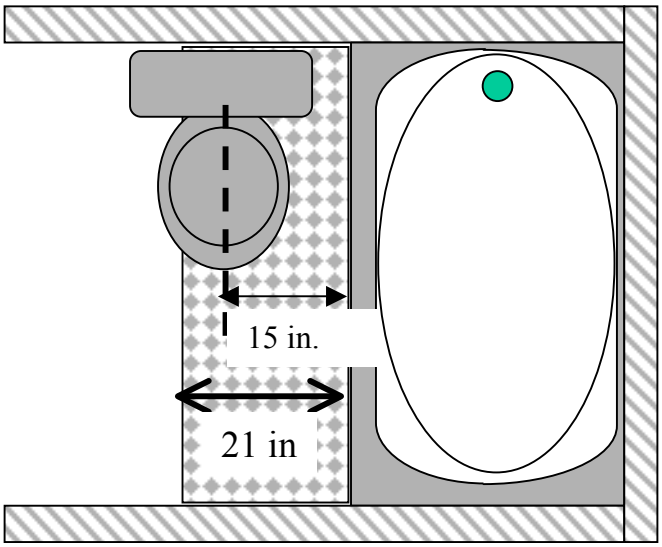

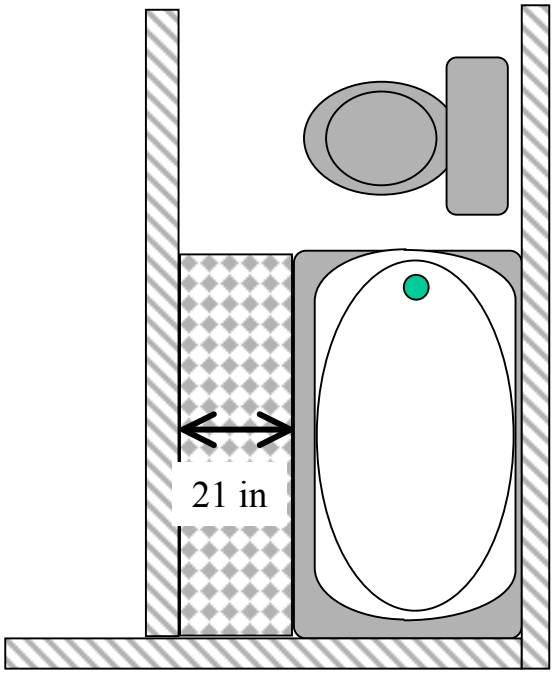

Omaha Plumbing Code
Figure 704(i)

Residential Dishwashing
Machine Waste Connection

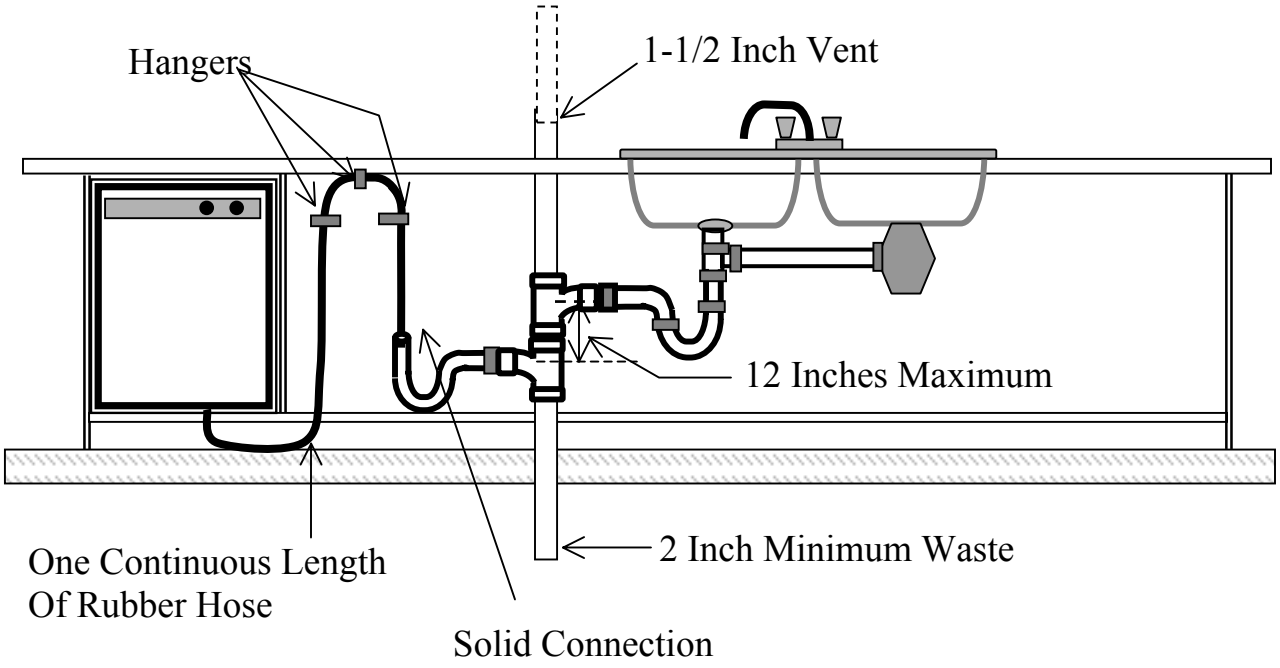

Omaha Plumbing Code
Figure 910

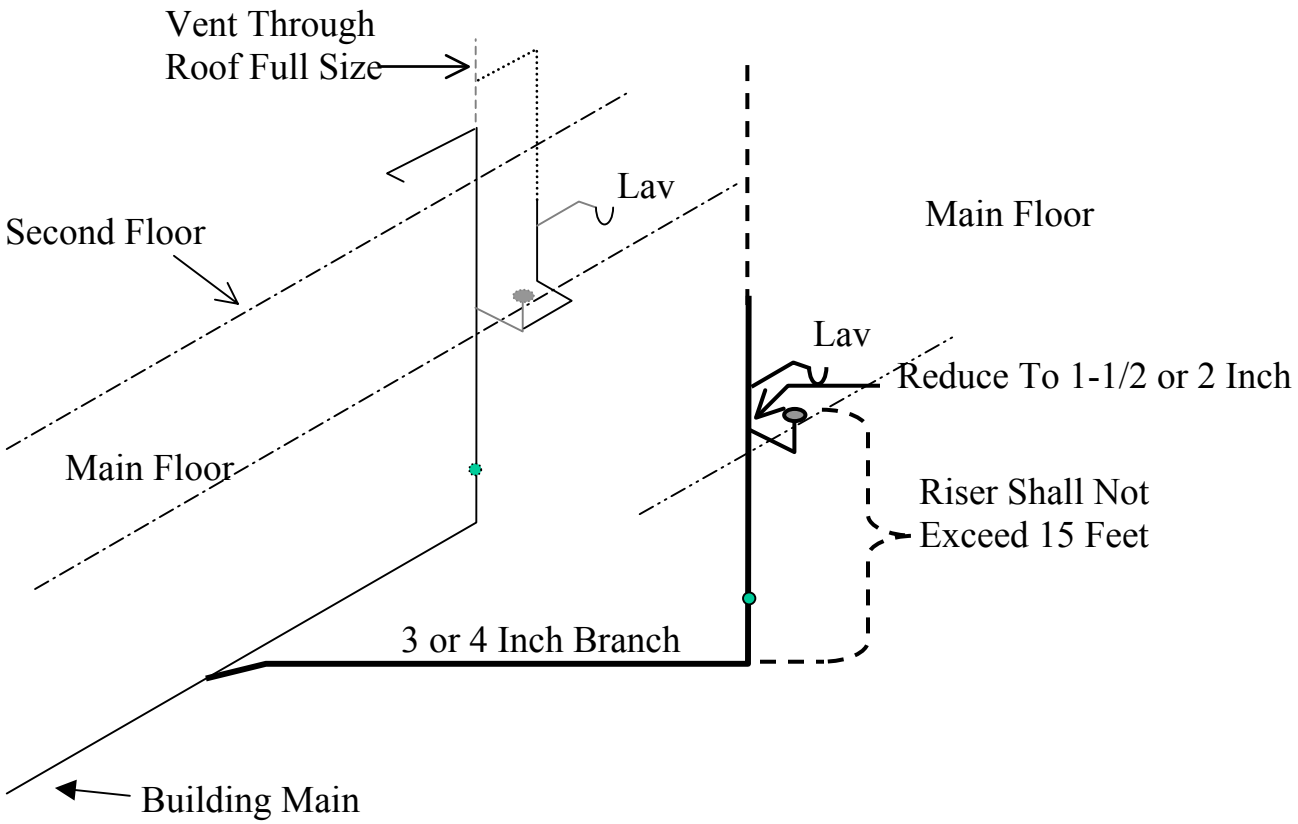

Omaha Plumbing Code
Figure 910(c)

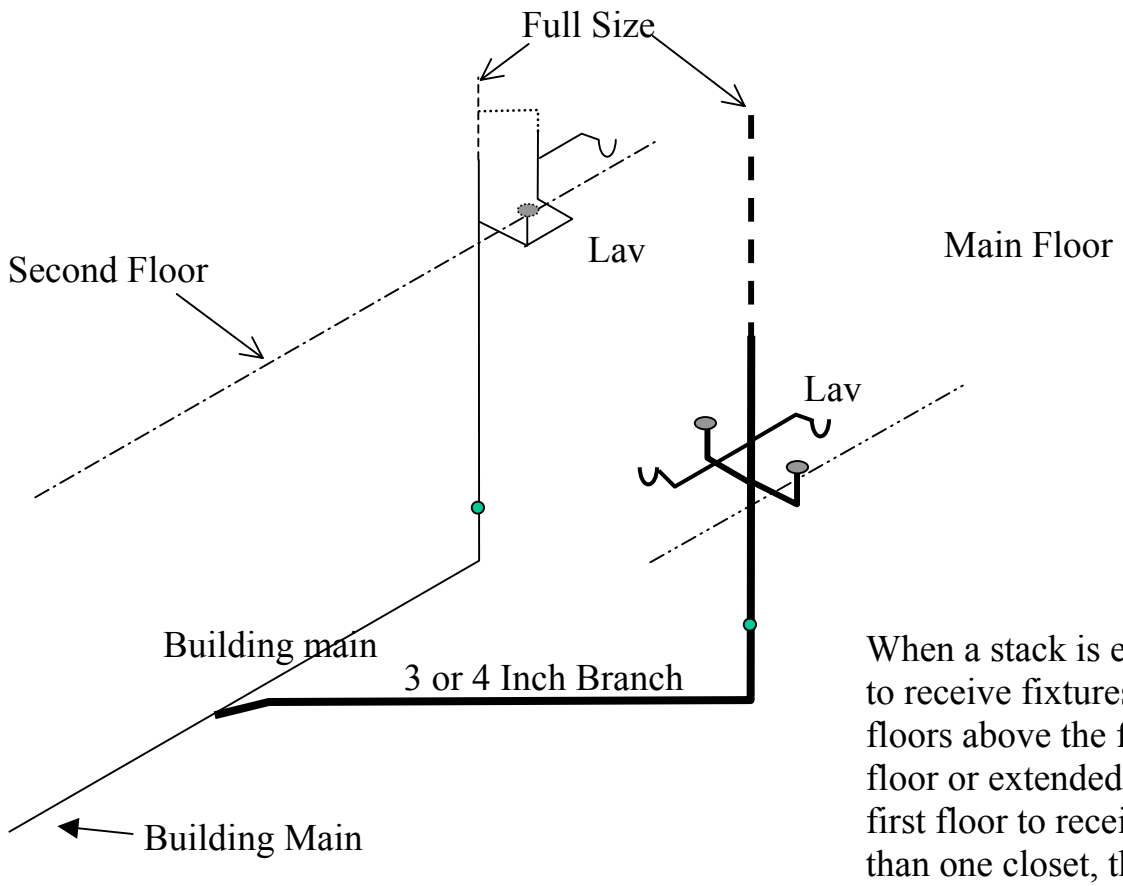

When a stack is extended to receive fixtures from floors above the first floor or extended to the first floor to receive more than one closet, the stack shall be run full size.

Omaha Plumbing Code
Figure 910(d)

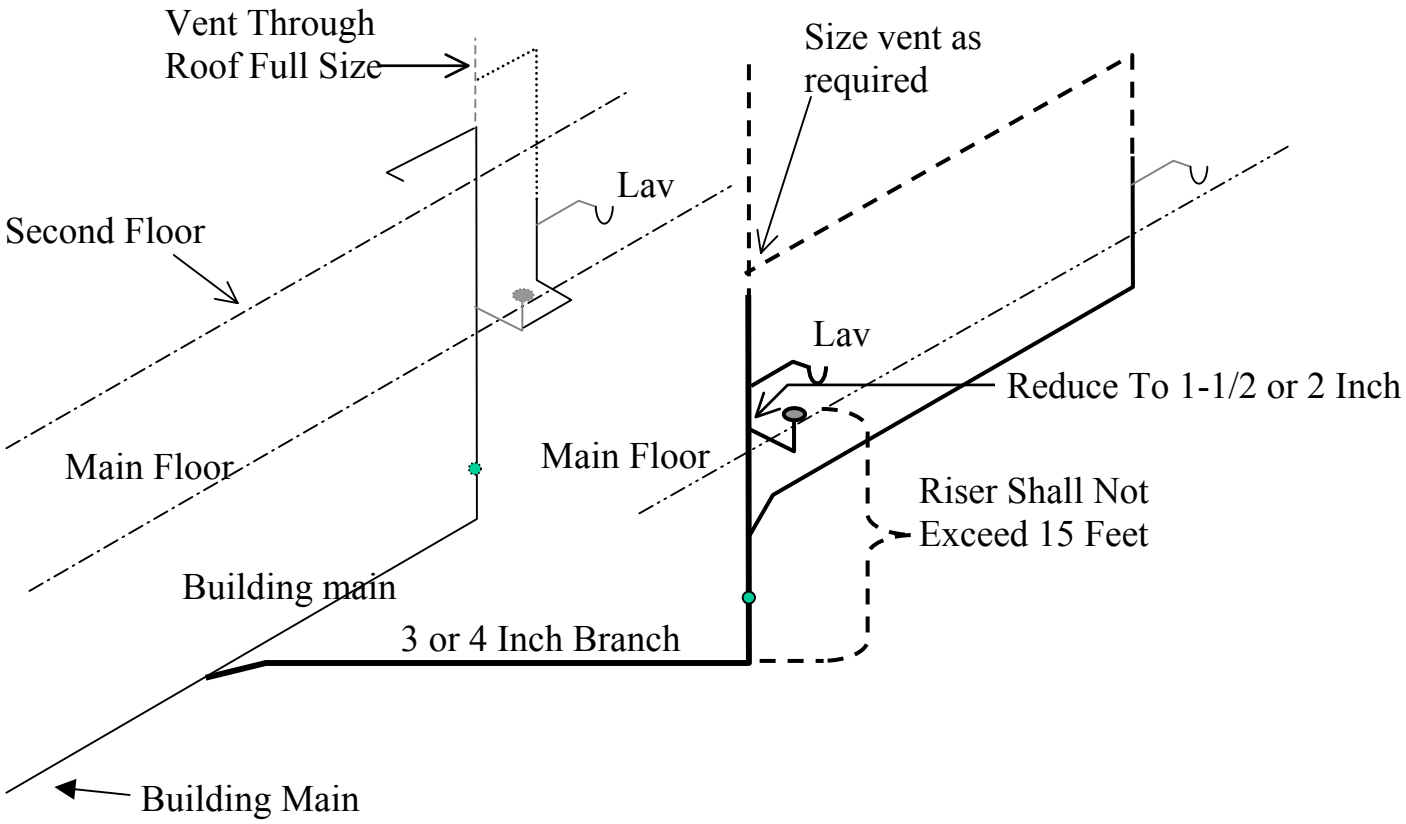

Omaha Plumbing Code
Figure 1109(e)

Grease Interceptor

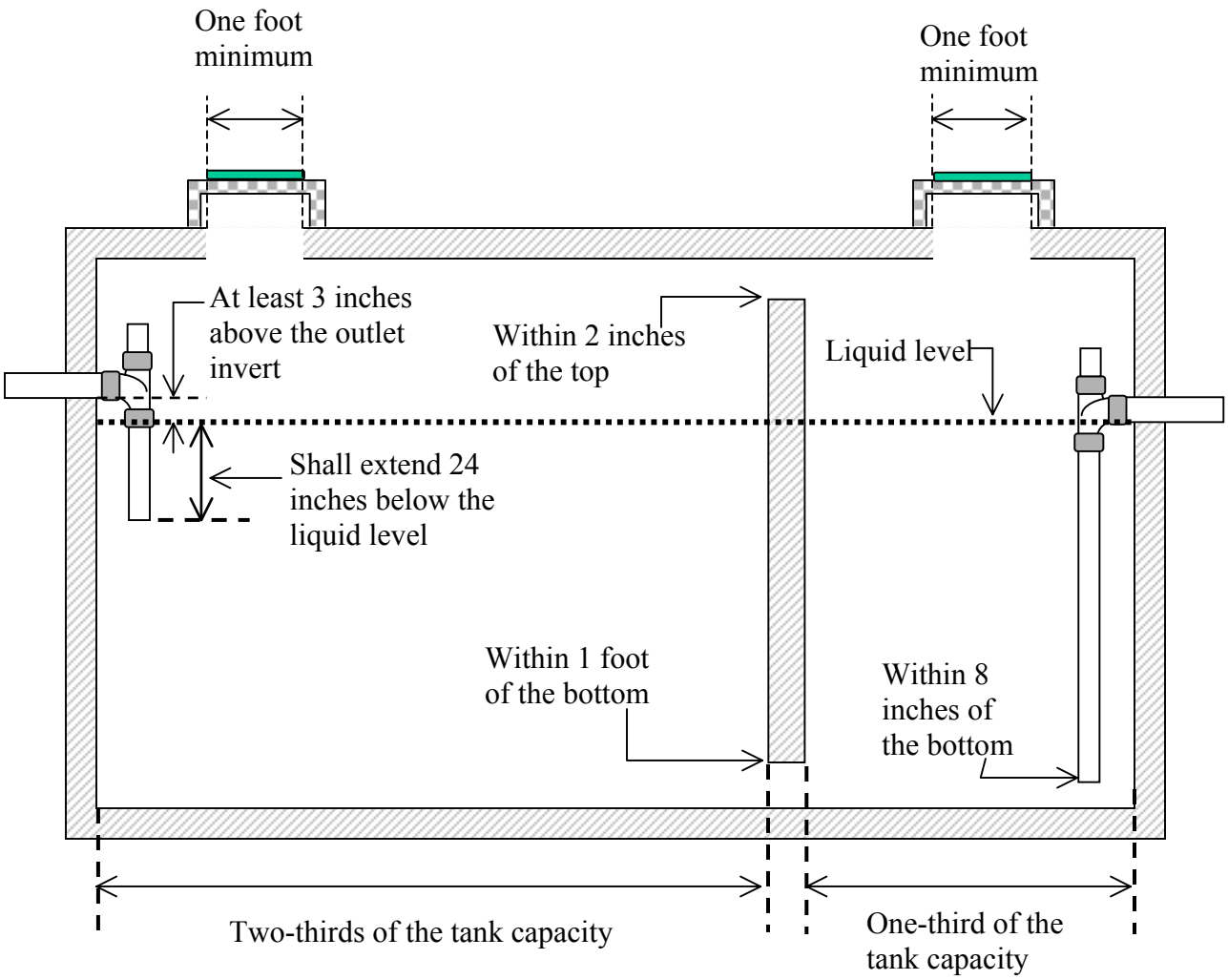

Omaha Plumbing Code
Figure 1140

Type I Interceptor

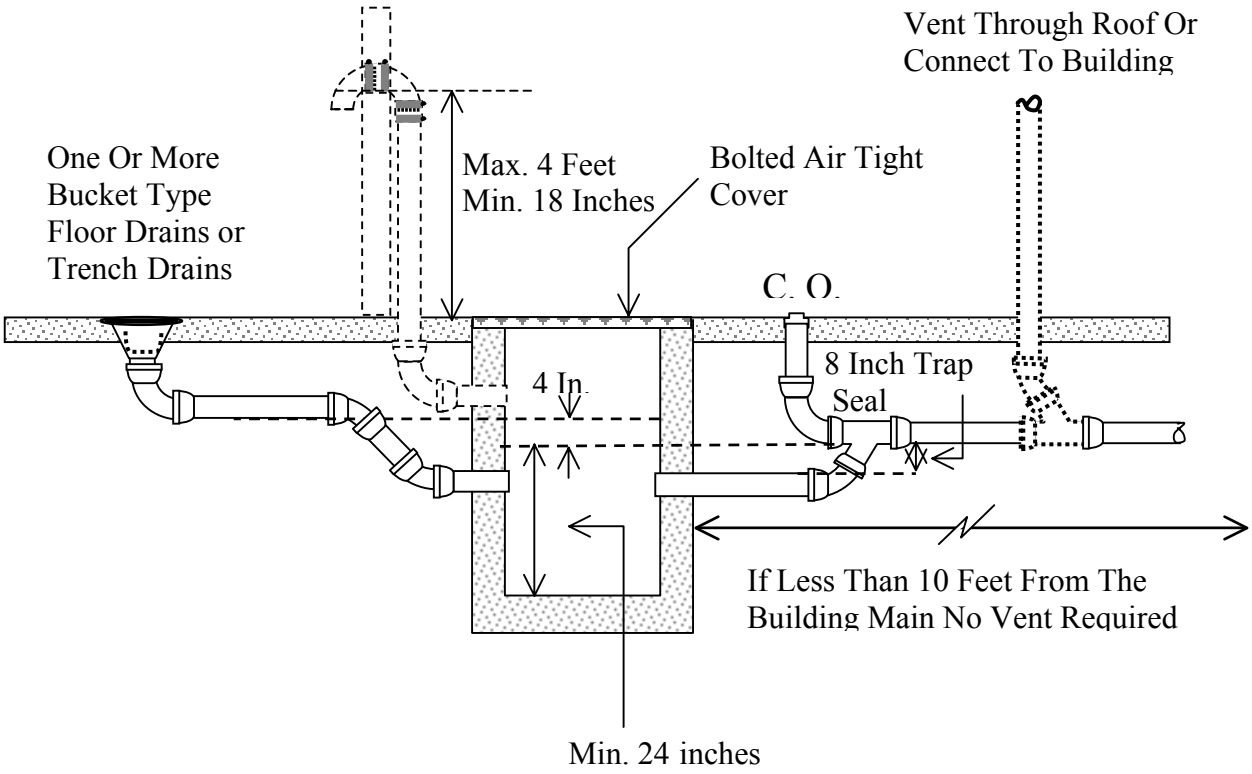

Omaha Plumbing Code
Figure 1142

Type I Interceptor

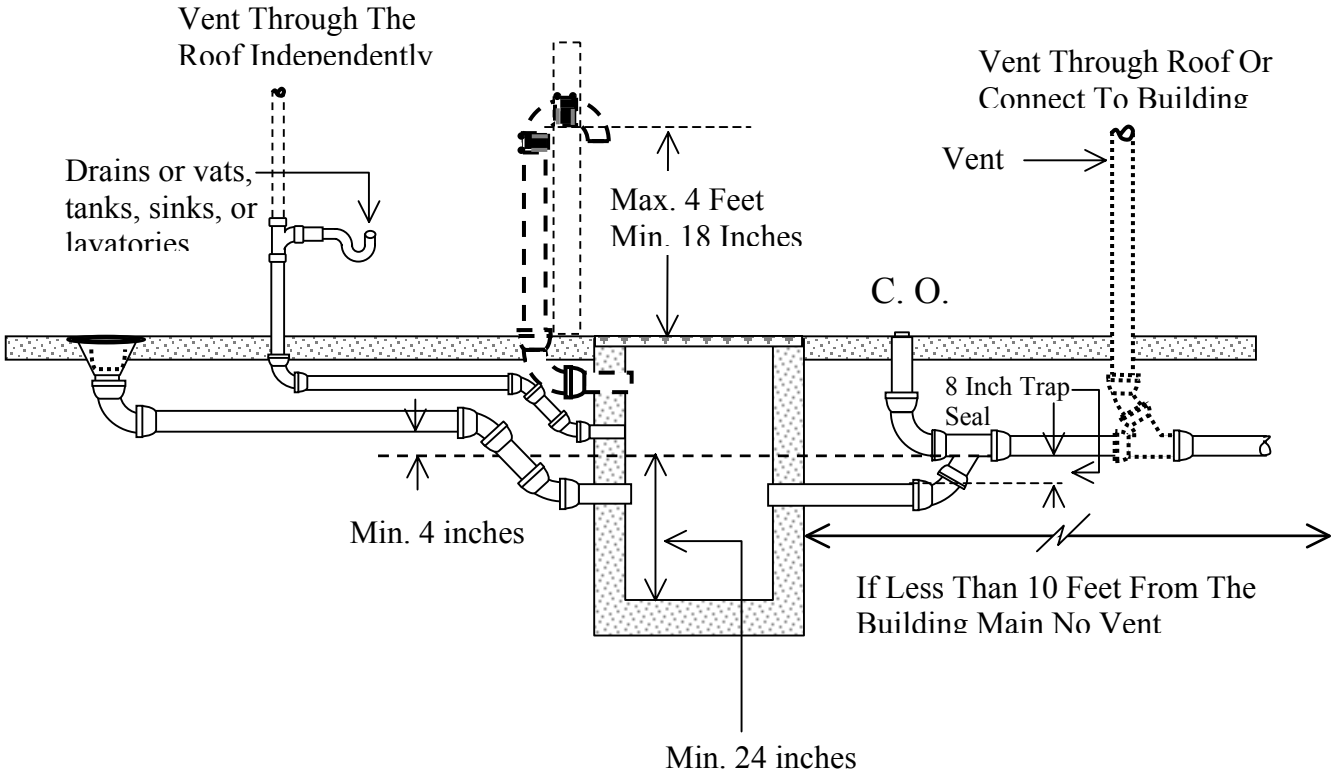

Omaha Plumbing Code
Figure 1143

Type II Interceptor

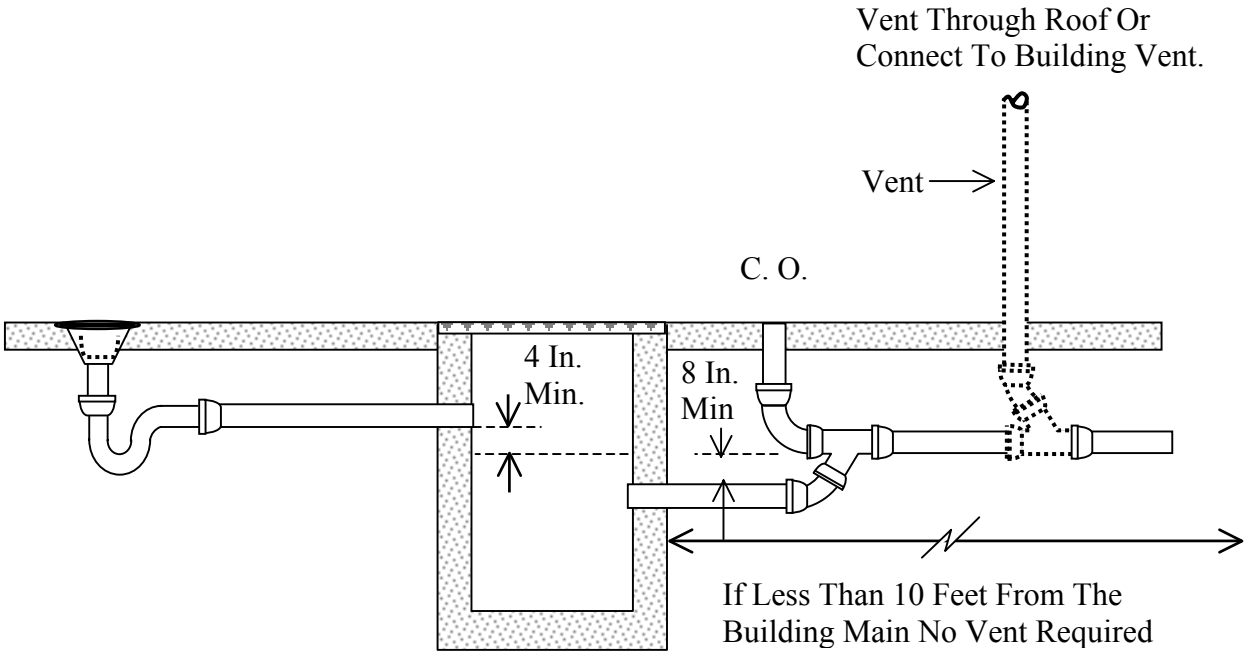

Omaha Plumbing Code
Figure 1144

Type III Mud and Sand Interceptors

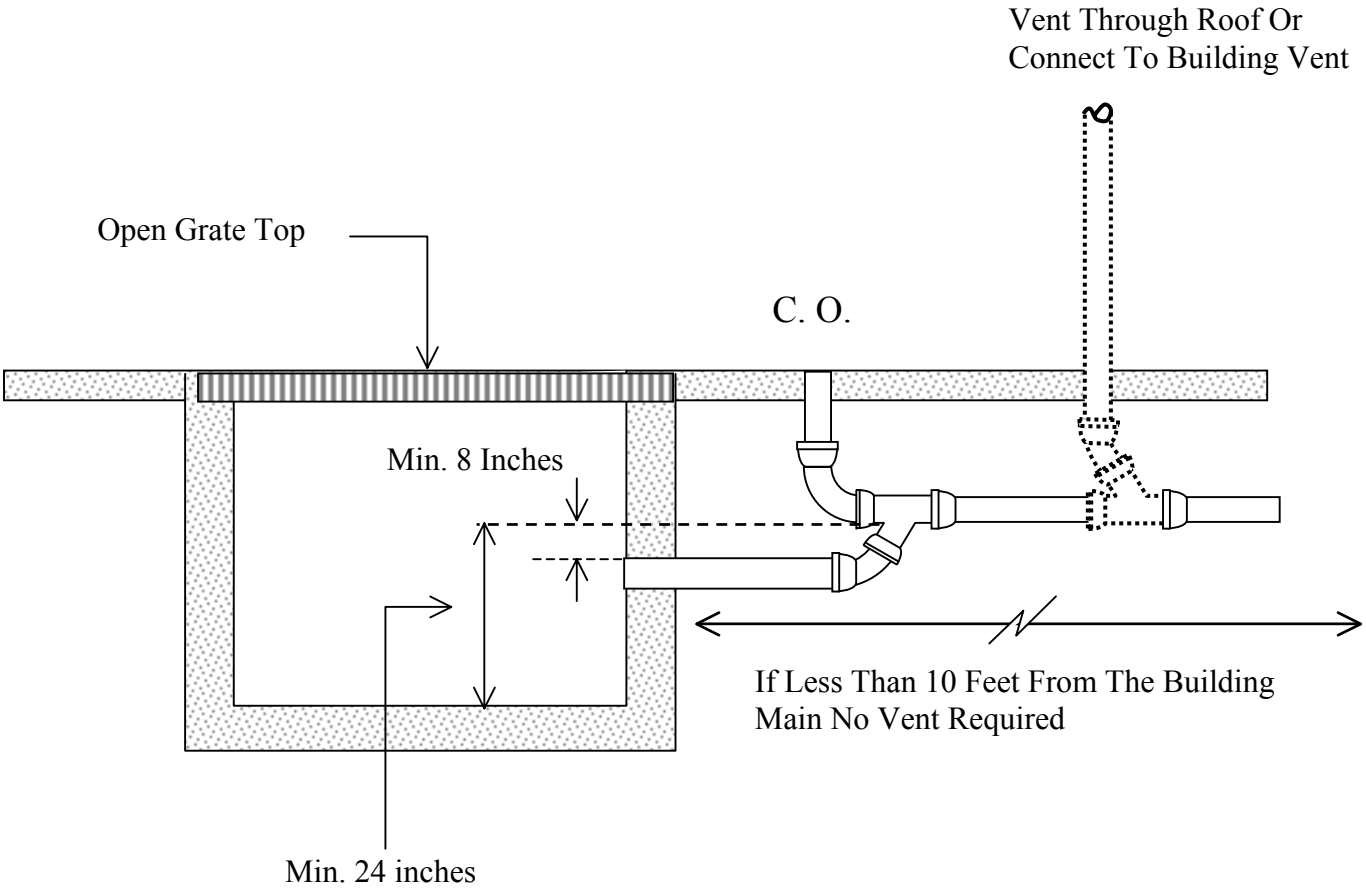

Omaha Plumbing Code
Figure 1145

Type IV Steam and Hot Water Interceptors

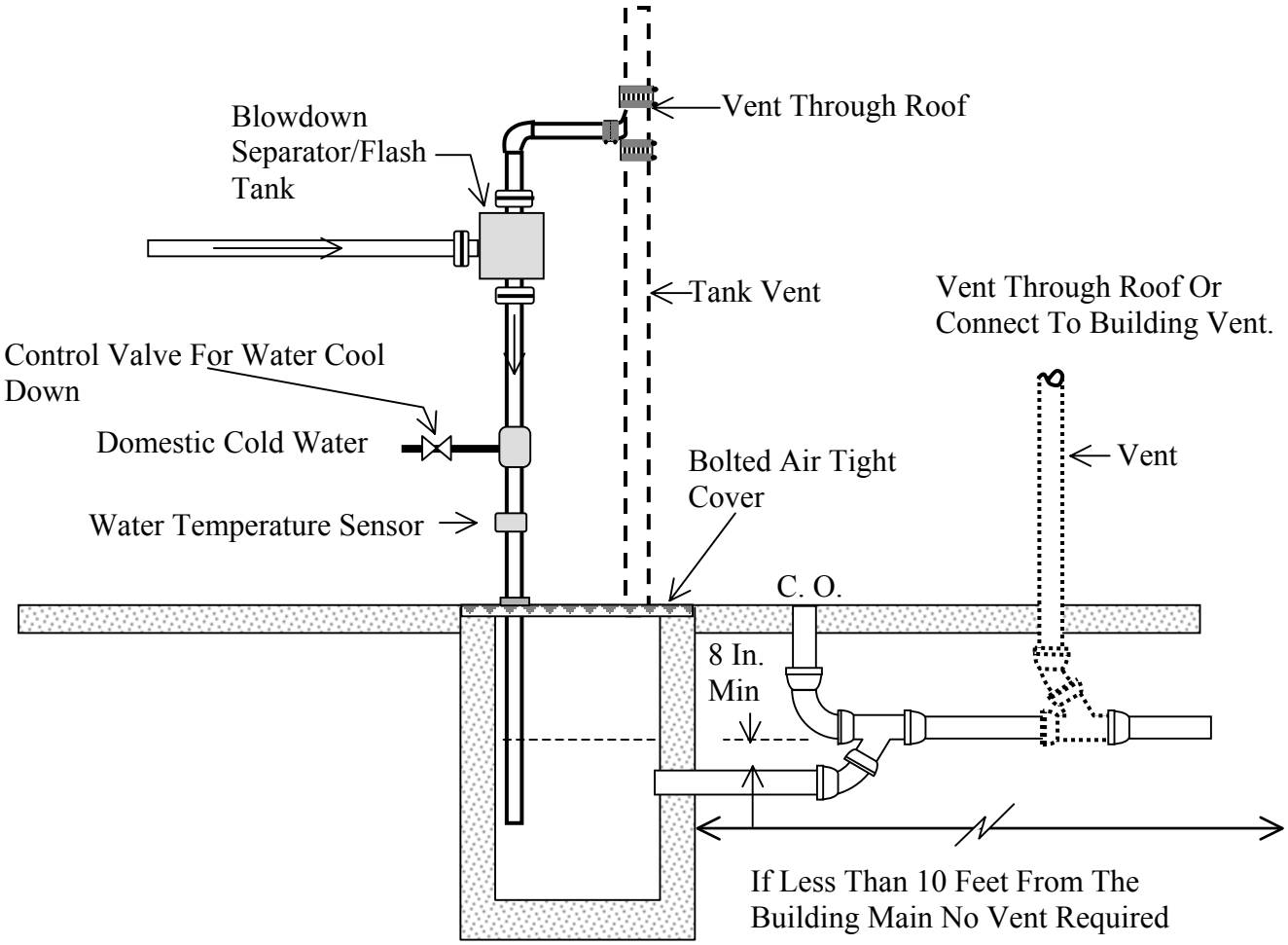

Omaha Plumbing Code
Figure 1146

Combination Type I and Type III Interceptor

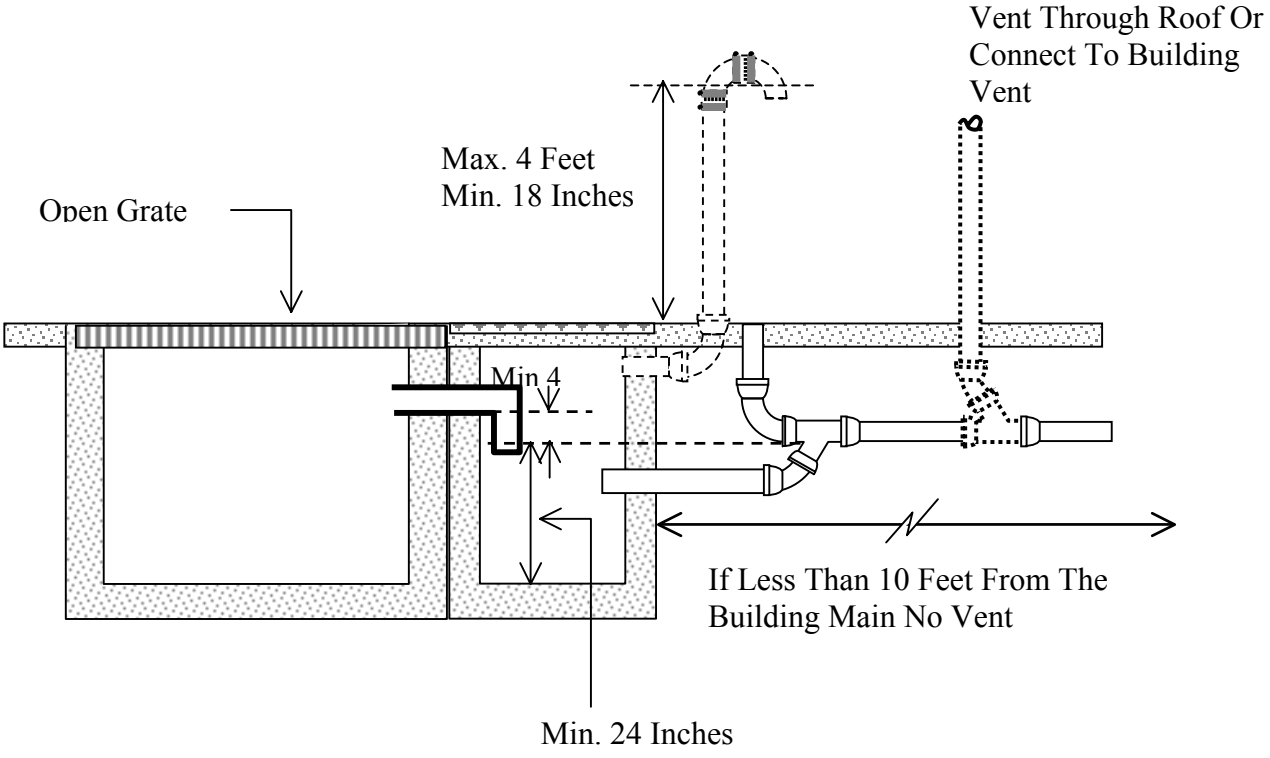

Drains in Multiple-Level Public Garages

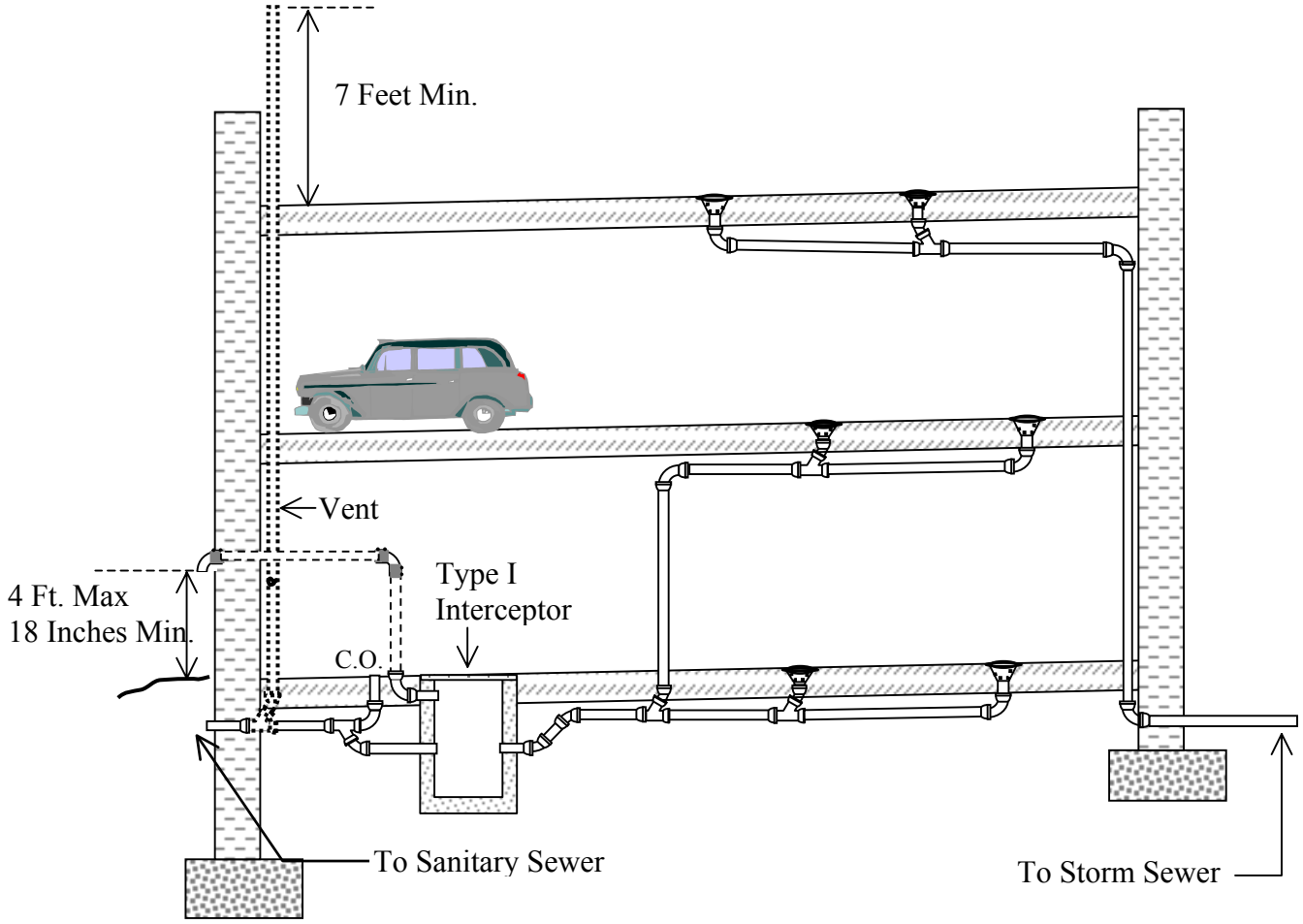

Multiple Car Wash Bays

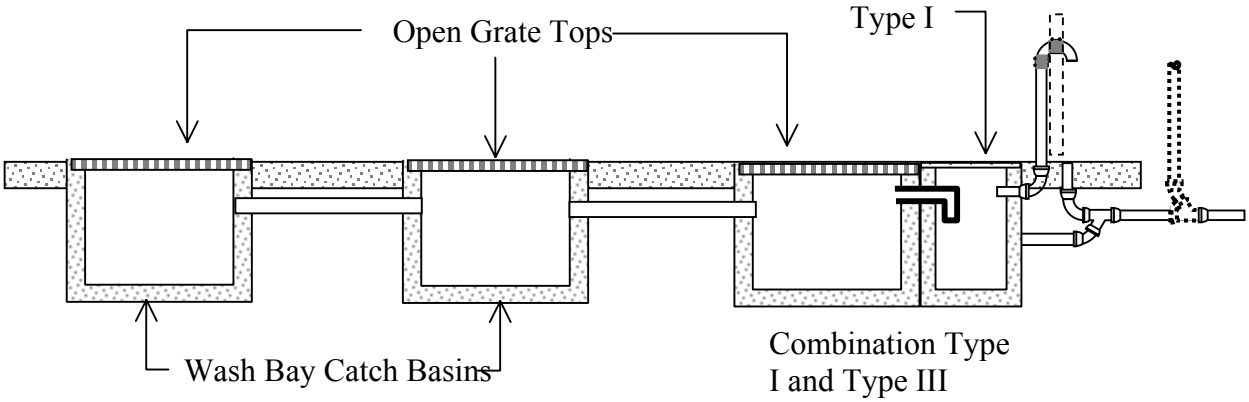

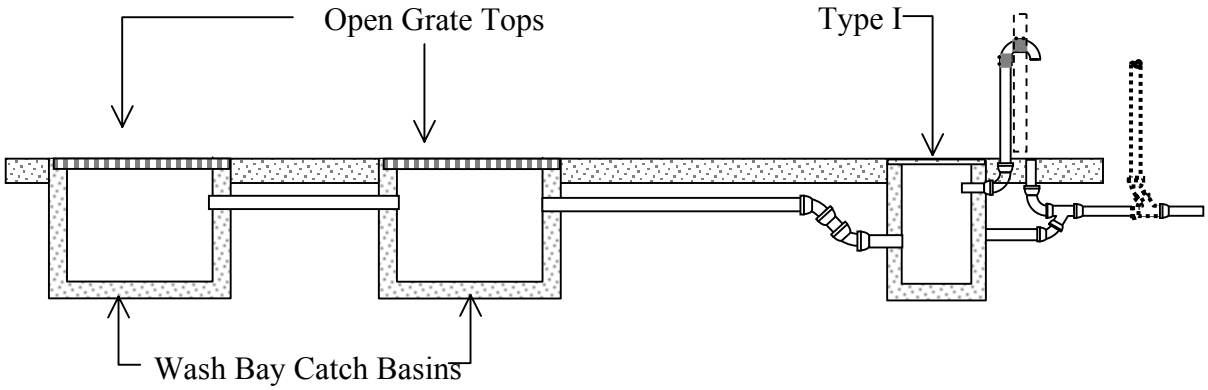

Omaha Plumbing Code
Figure 1207

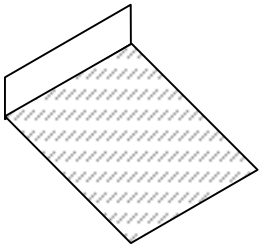

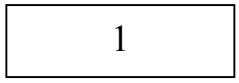

50%

Add To 100% Of The Roof Area

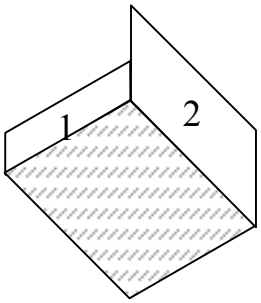

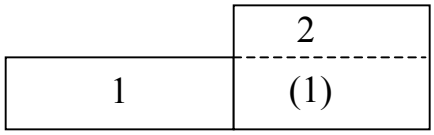

50%
35%

Add To 100% Of The Roof Area

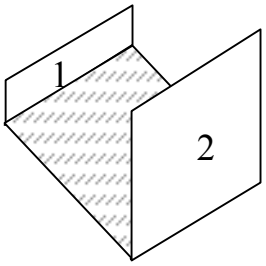

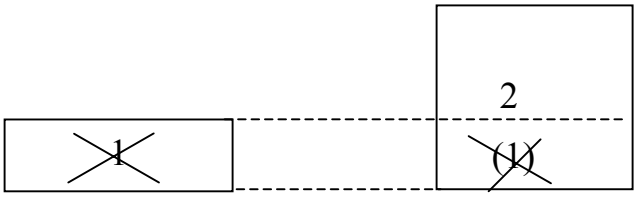

50%
0%

Add To 100% Of The Roof Area

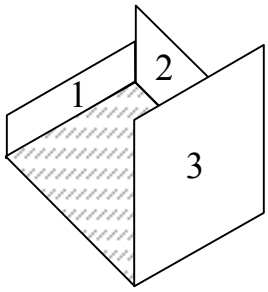

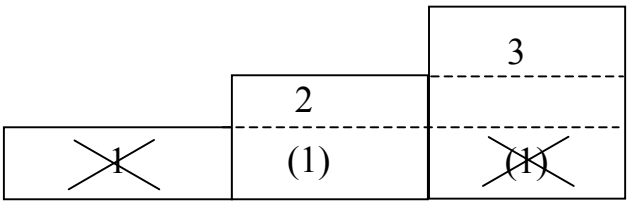

50%
35%
35%

Add To 100% Of The Roof Area

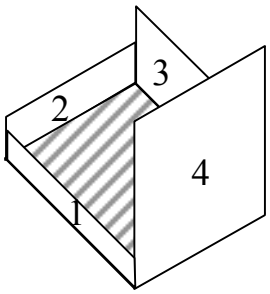

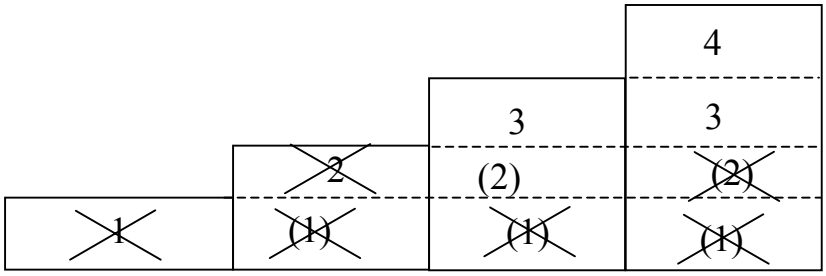

50%
35%
50%
0%

Add To 100% Of The Roof Area

Omaha Plumbing Code
Figure 1210(a)

The Overflow Drain Must Be 2 Inches
Above The Low Point Of The Roof

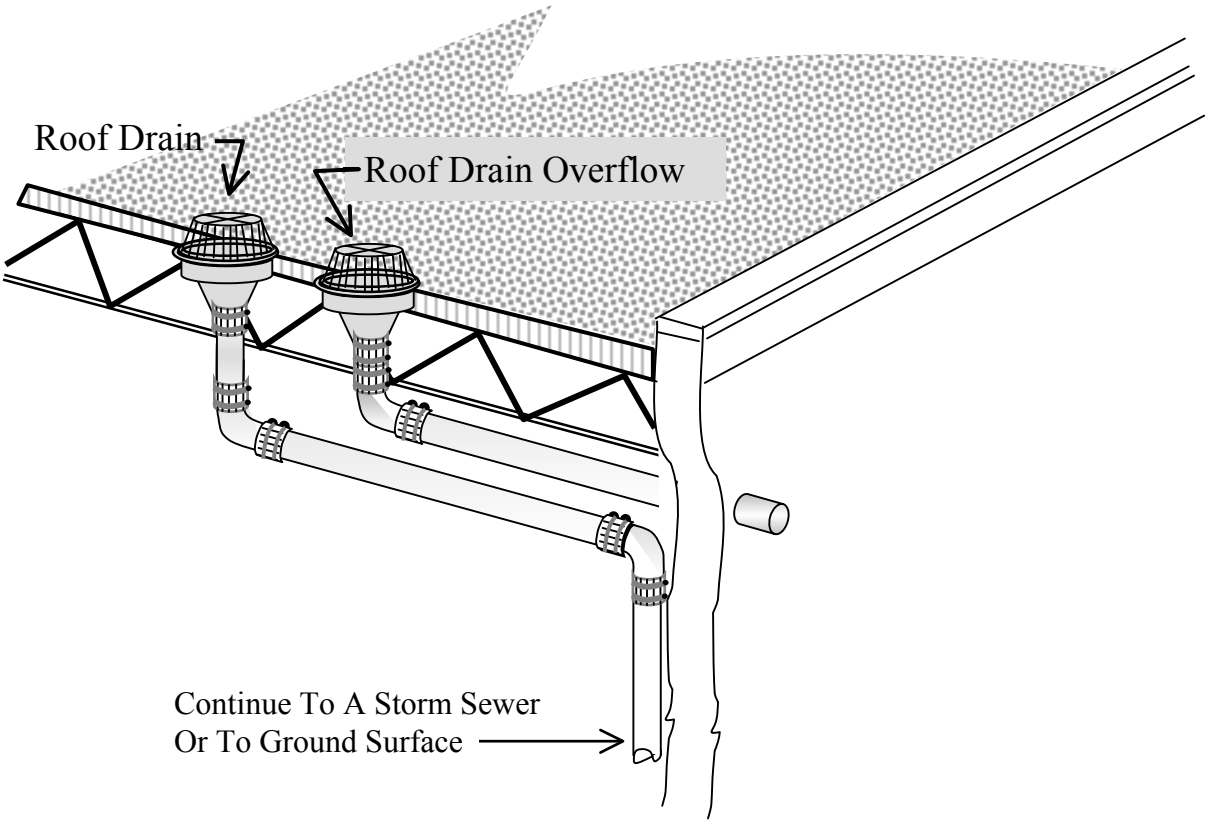

Omaha Plumbing Code
Figure 1210(c)

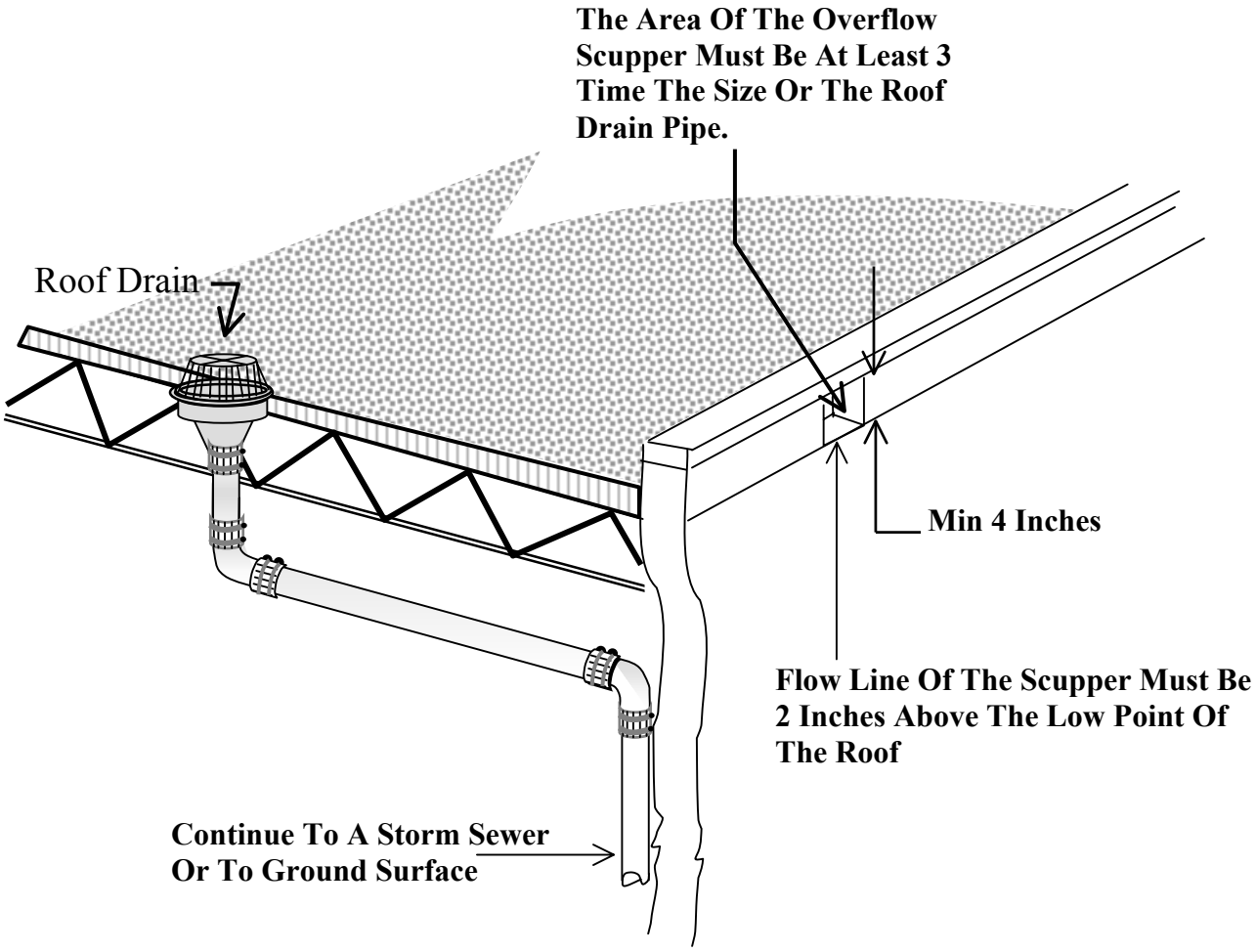

Omaha Plumbing Code
Figure 1305(a)

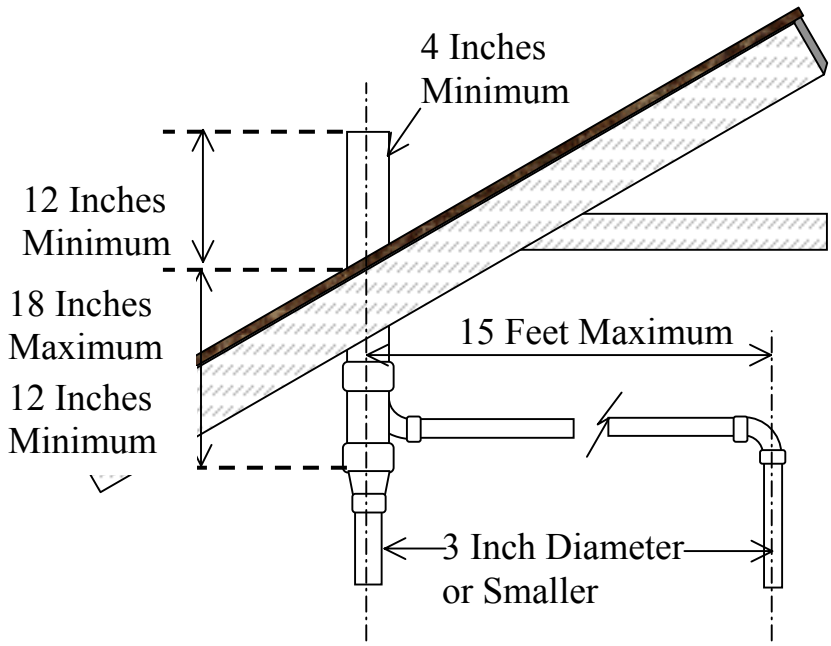

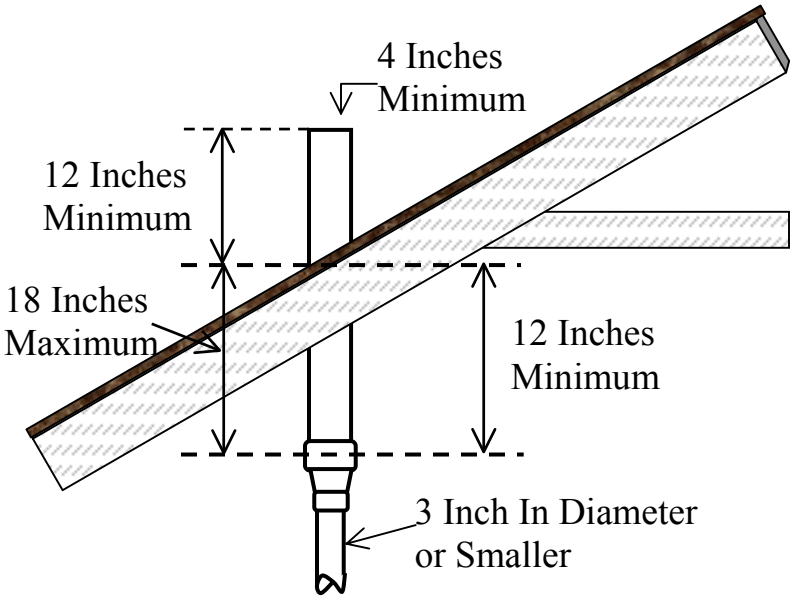

Omaha Plumbing Code
Figure 1305(b)(1)

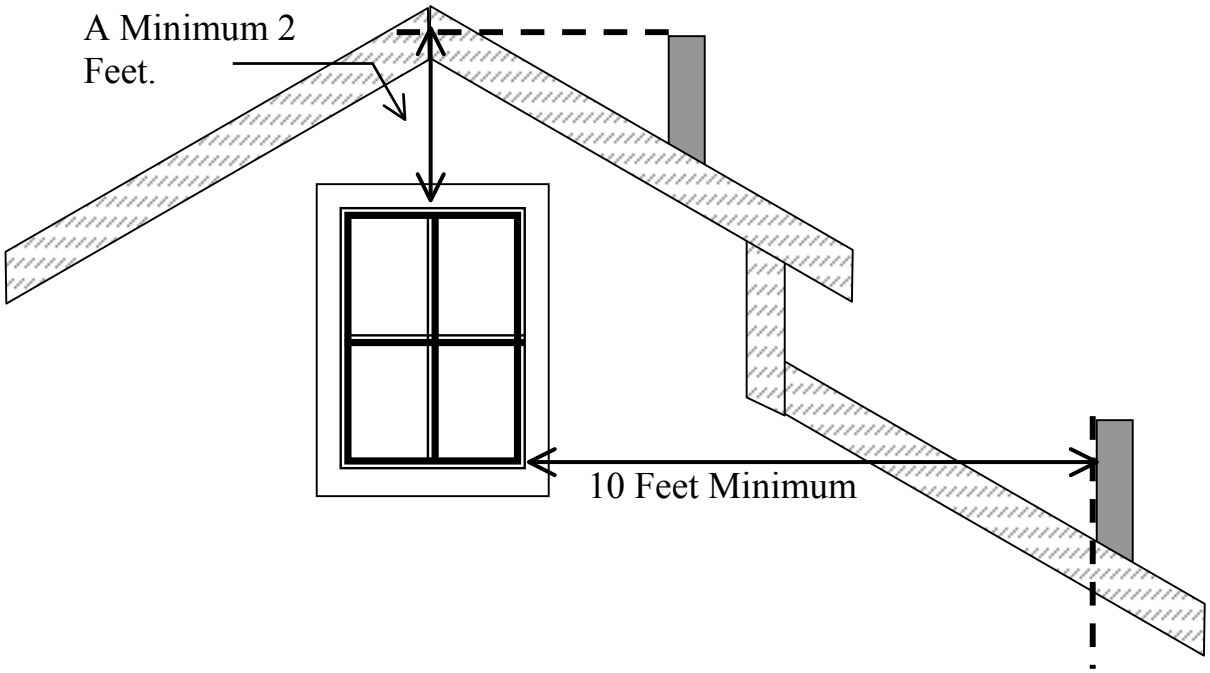

Omaha Plumbing Code
Figure 1305(b)(4)

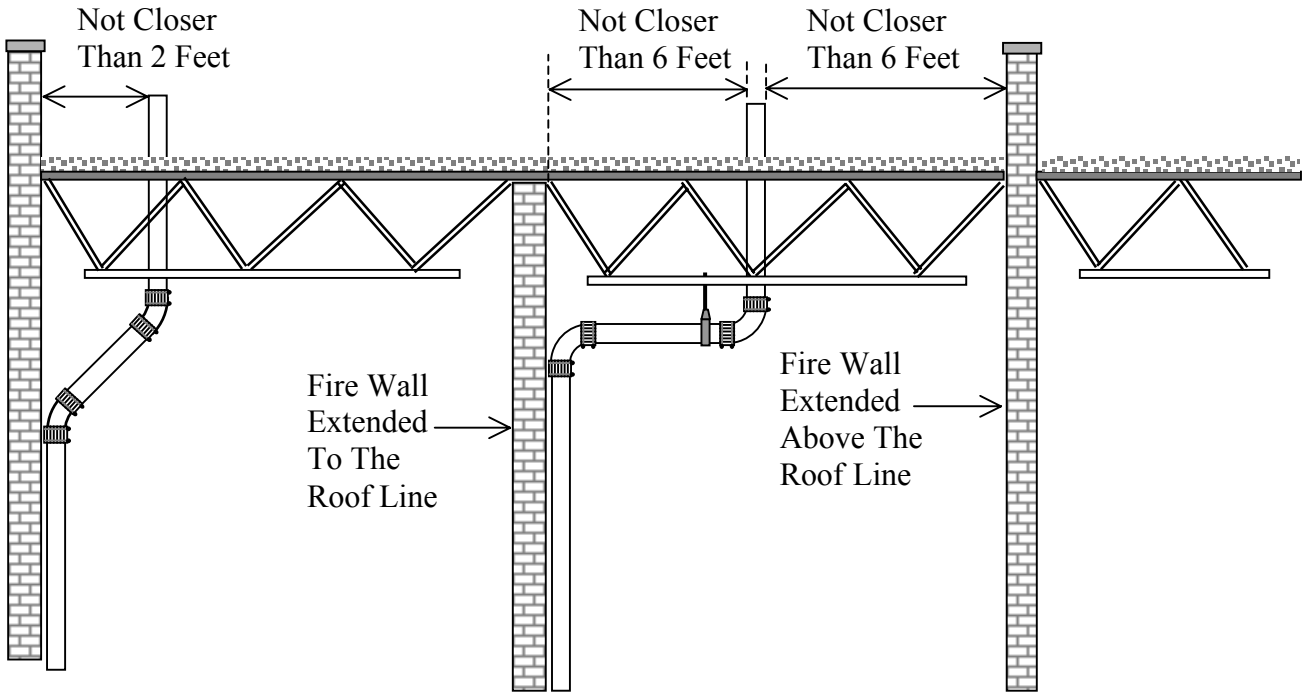

Omaha Plumbing Code
Figure 1305(b)(5)

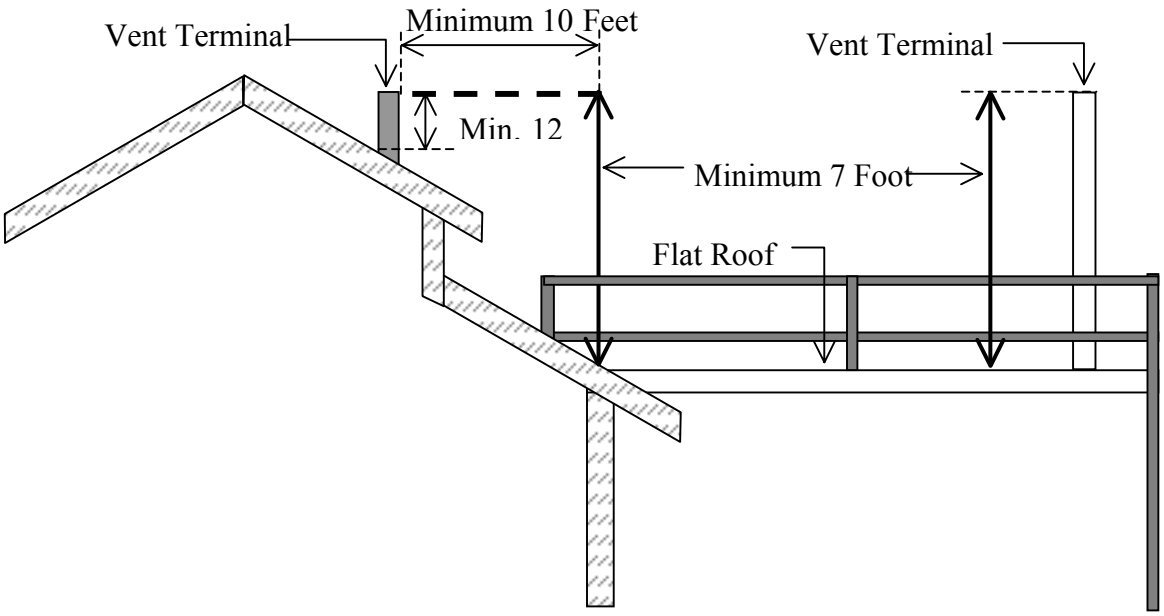

Omaha Plumbing Code
Figure 1309

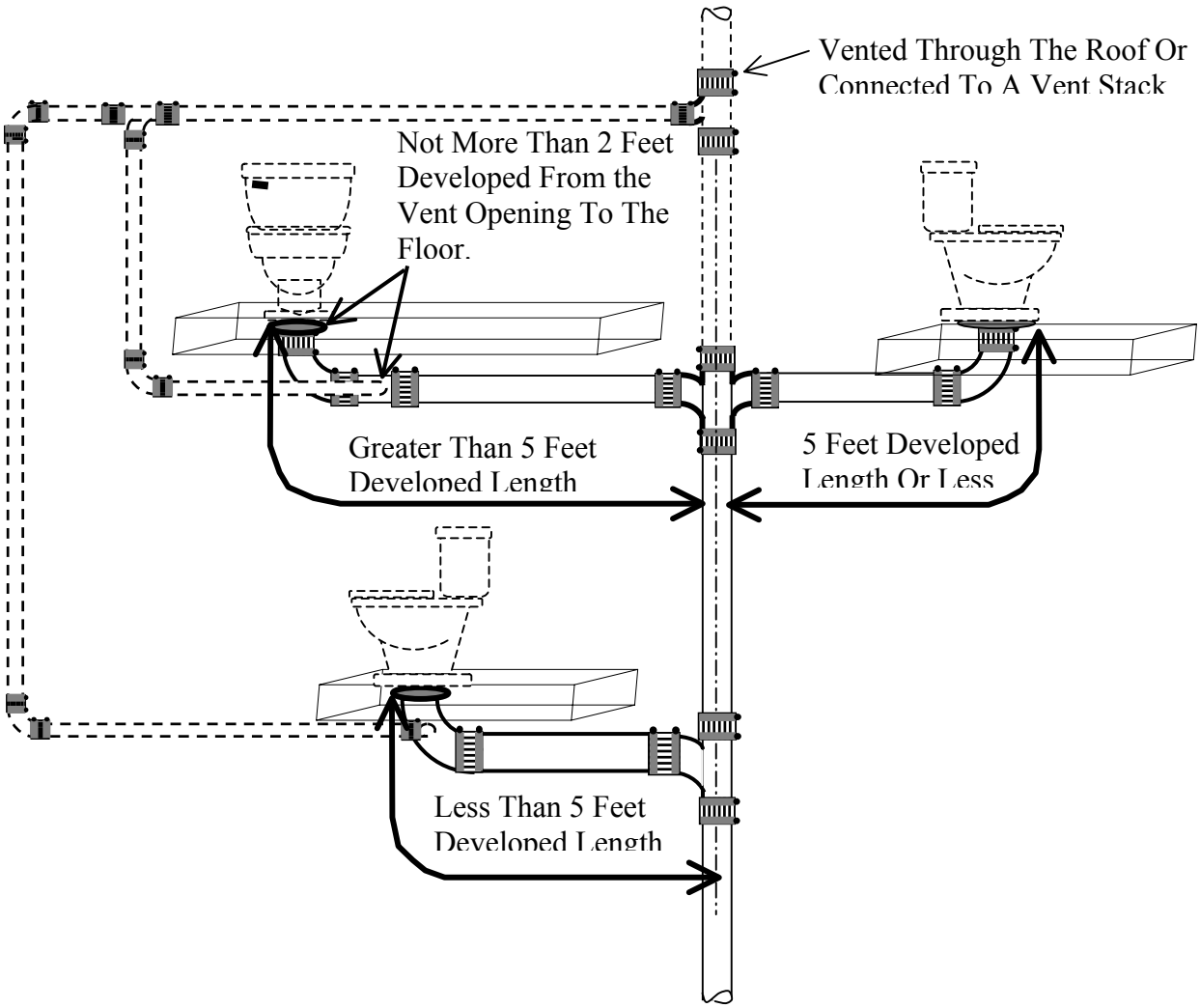

Omaha Plumbing Code
Figure 1310(b)

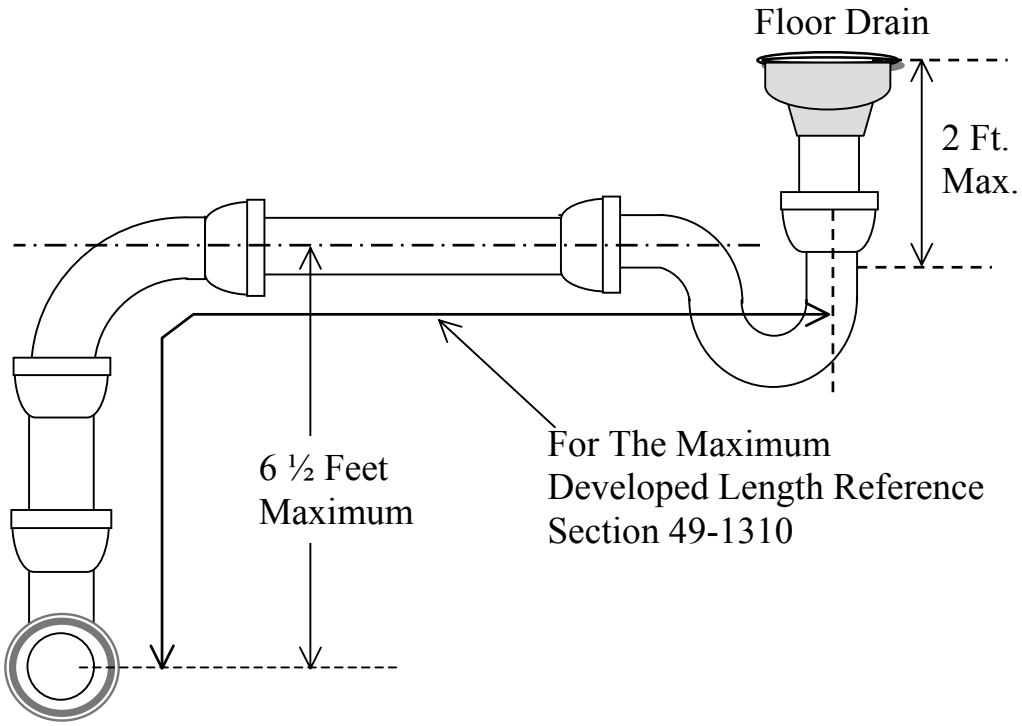

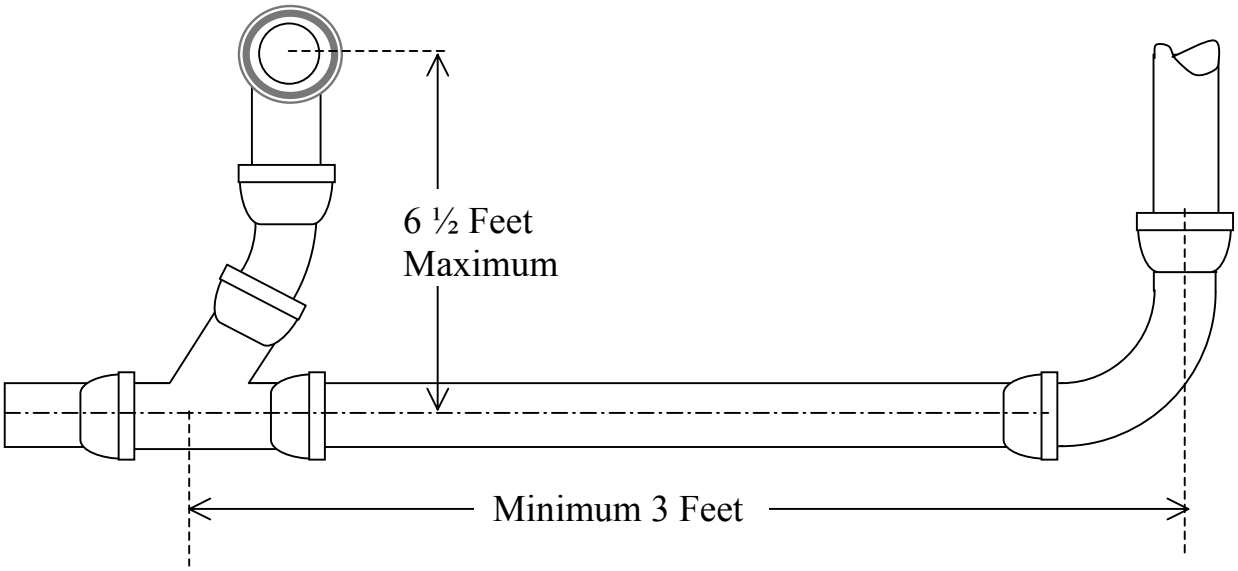

Omaha Plumbing Code
Figure 1312(c)

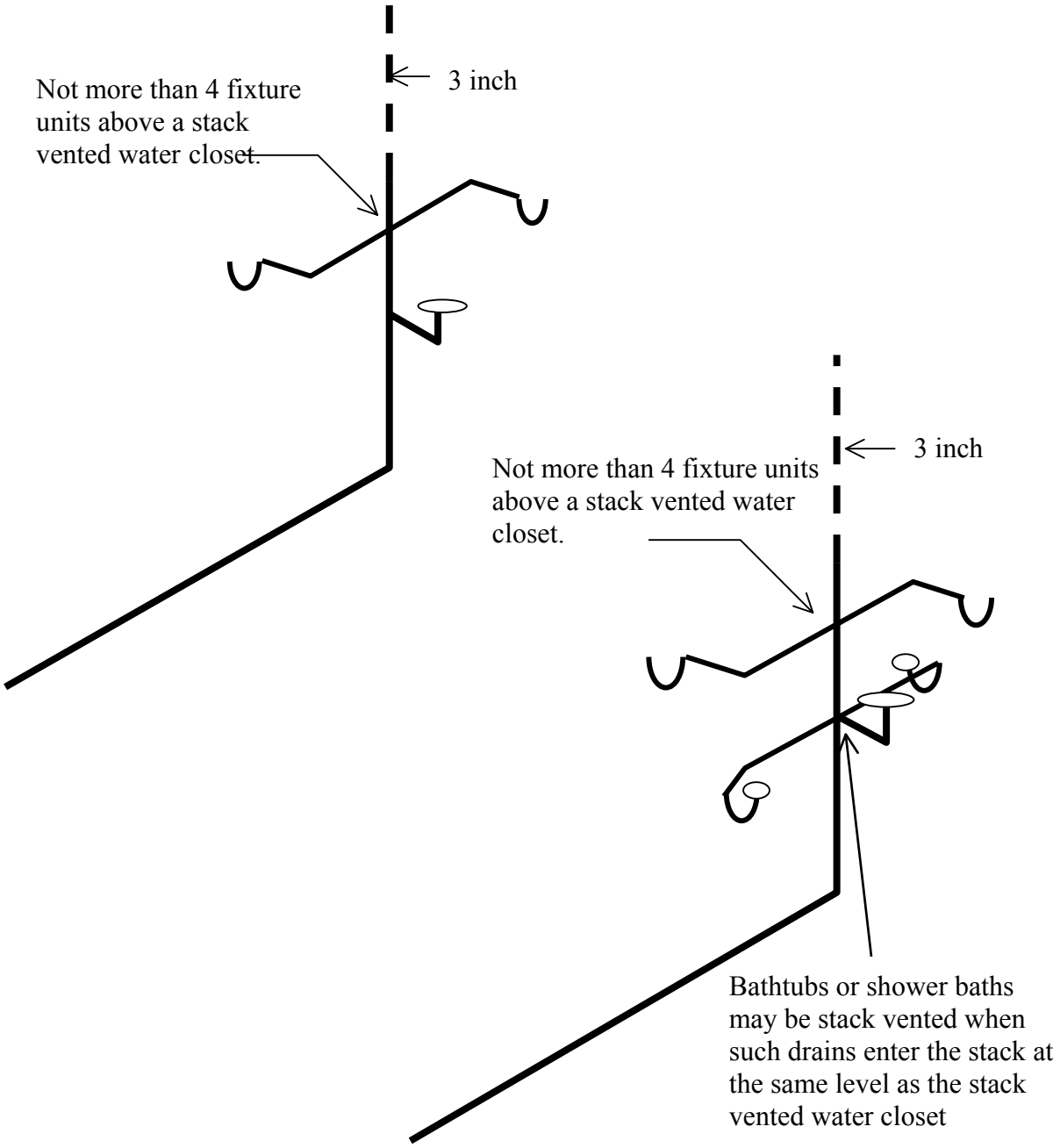

Omaha Plumbing Code
Figure 1314(a)

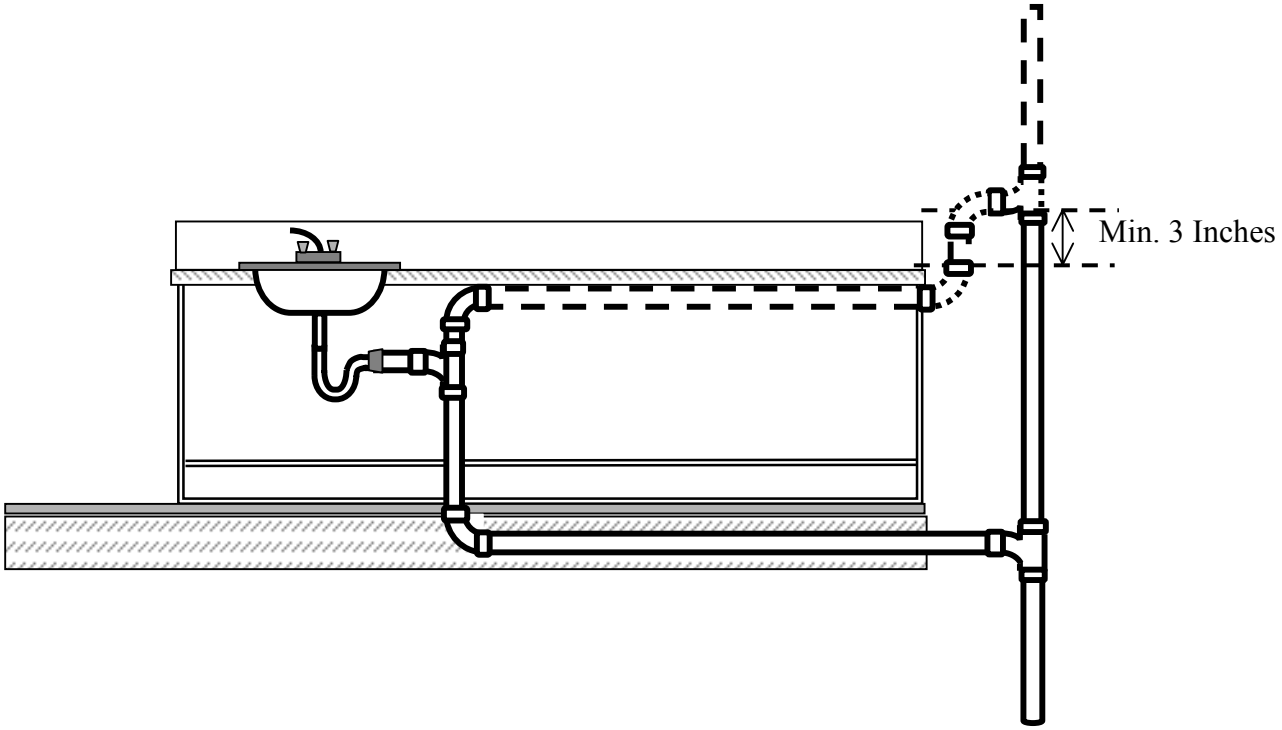

Omaha Plumbing Code
Figure 1314(b)1

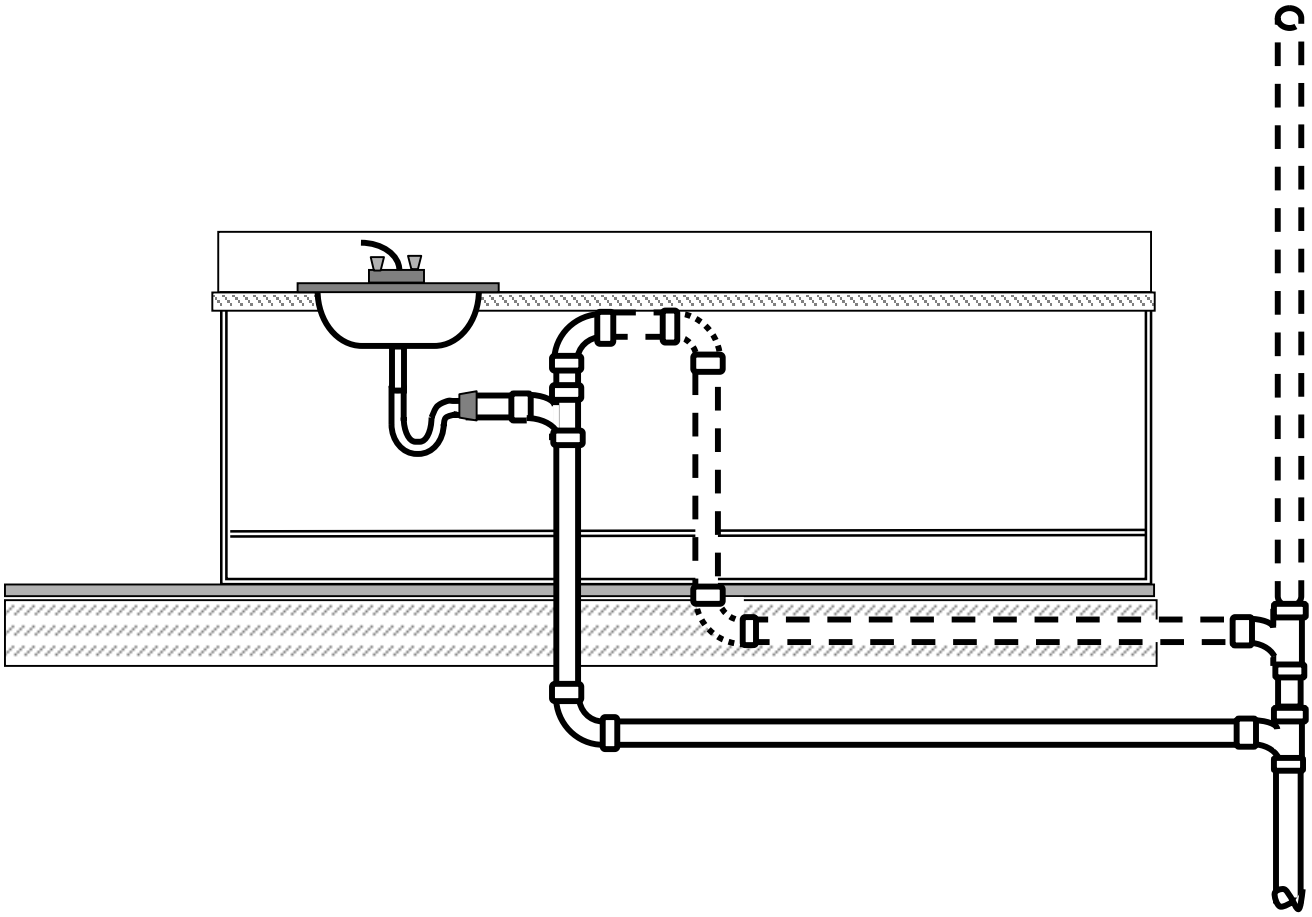

Omaha Plumbing Code
Figure 1314(b) 2

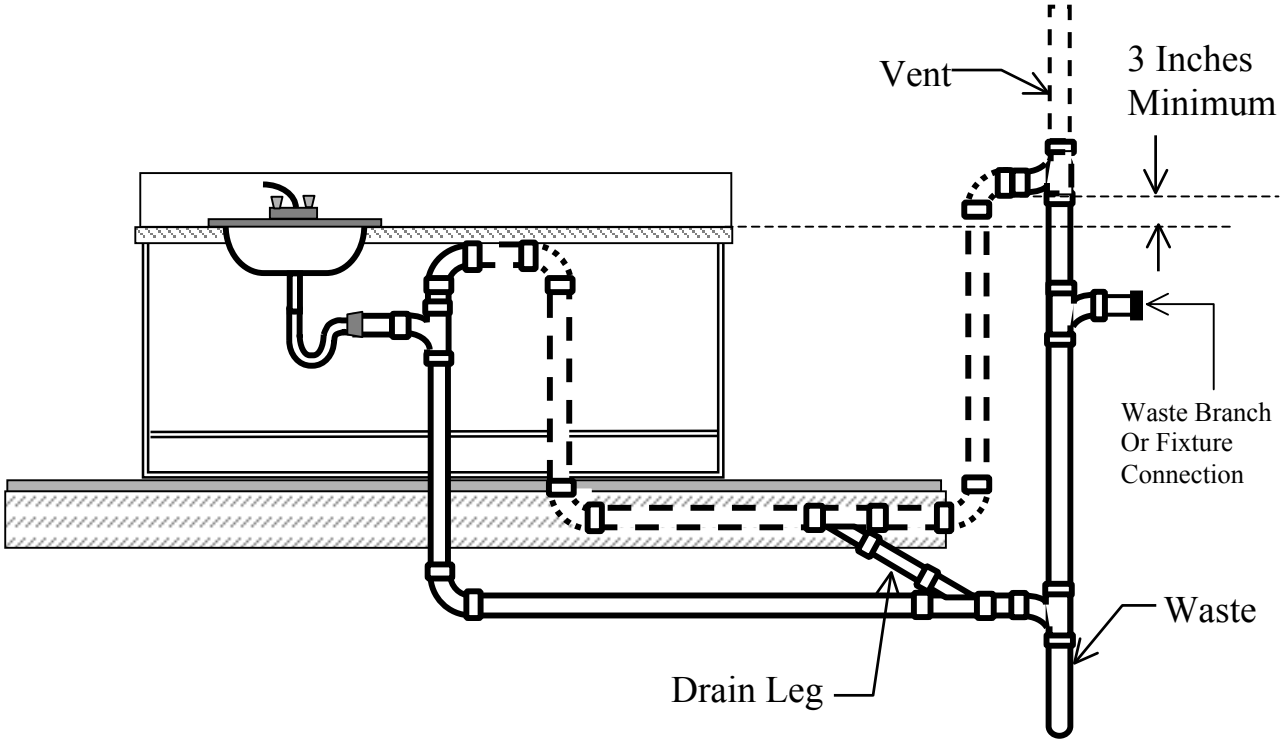

Omaha Plumbing Code
Figure 1314(b) 3

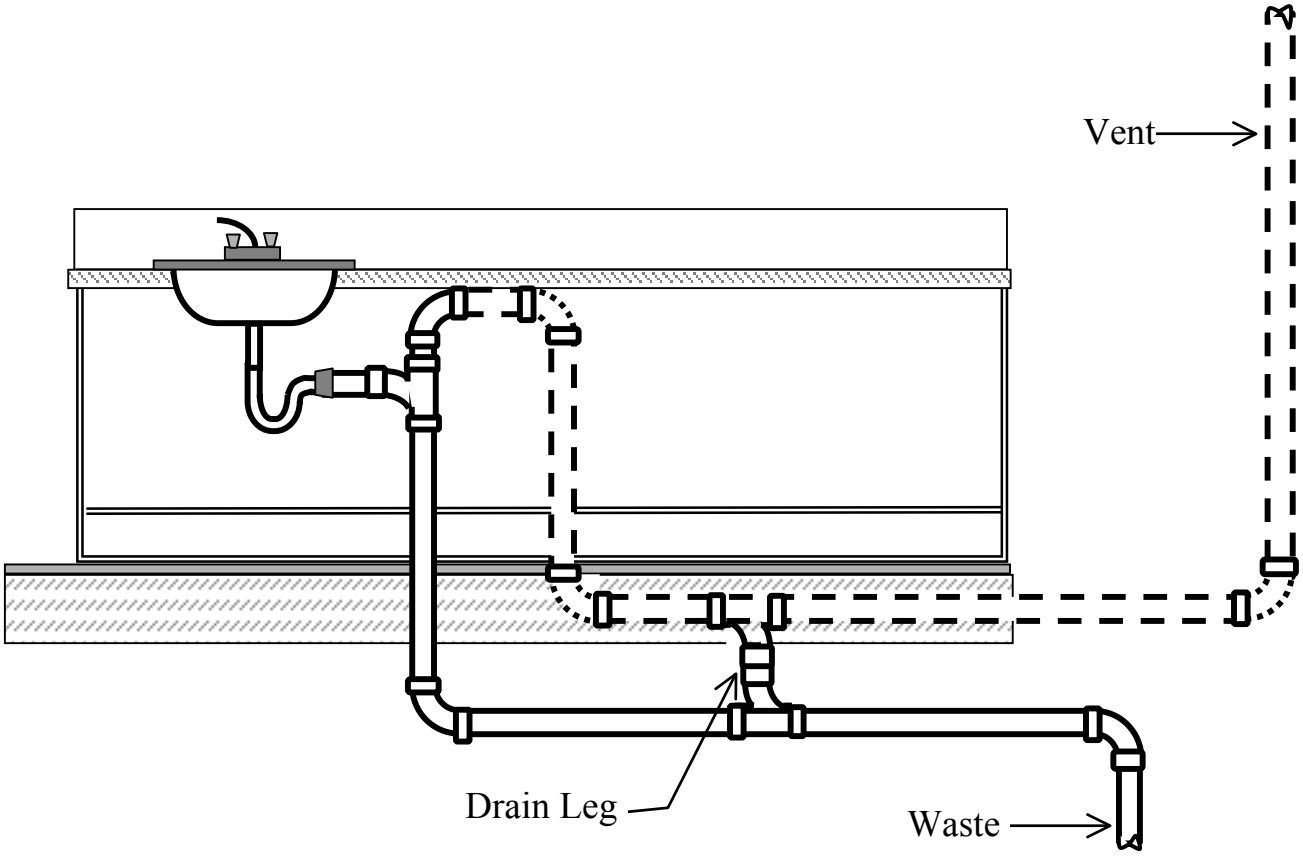

Omaha Plumbing Code
Figure 1314(c)

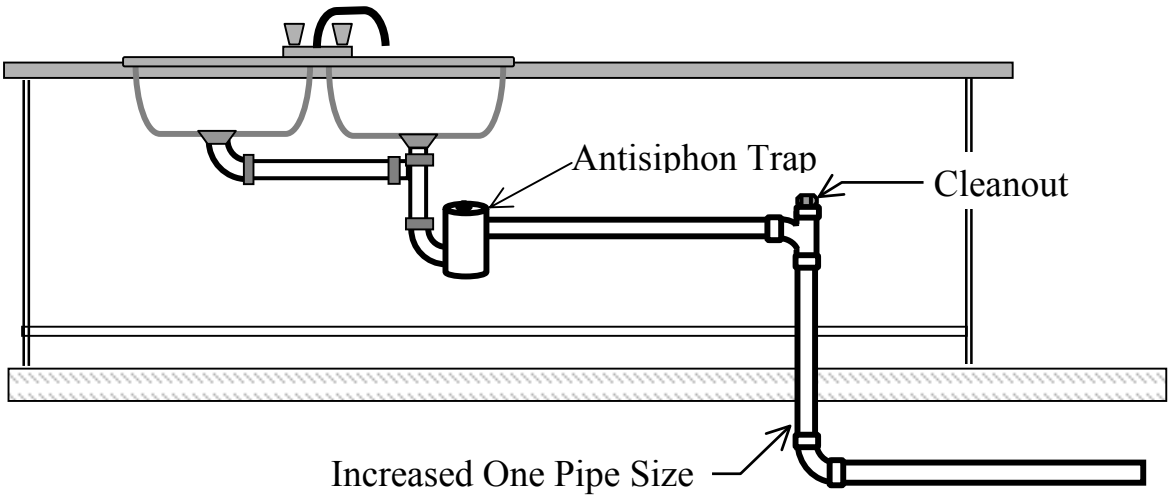

Omaha Plumbing Code
Figure 1315

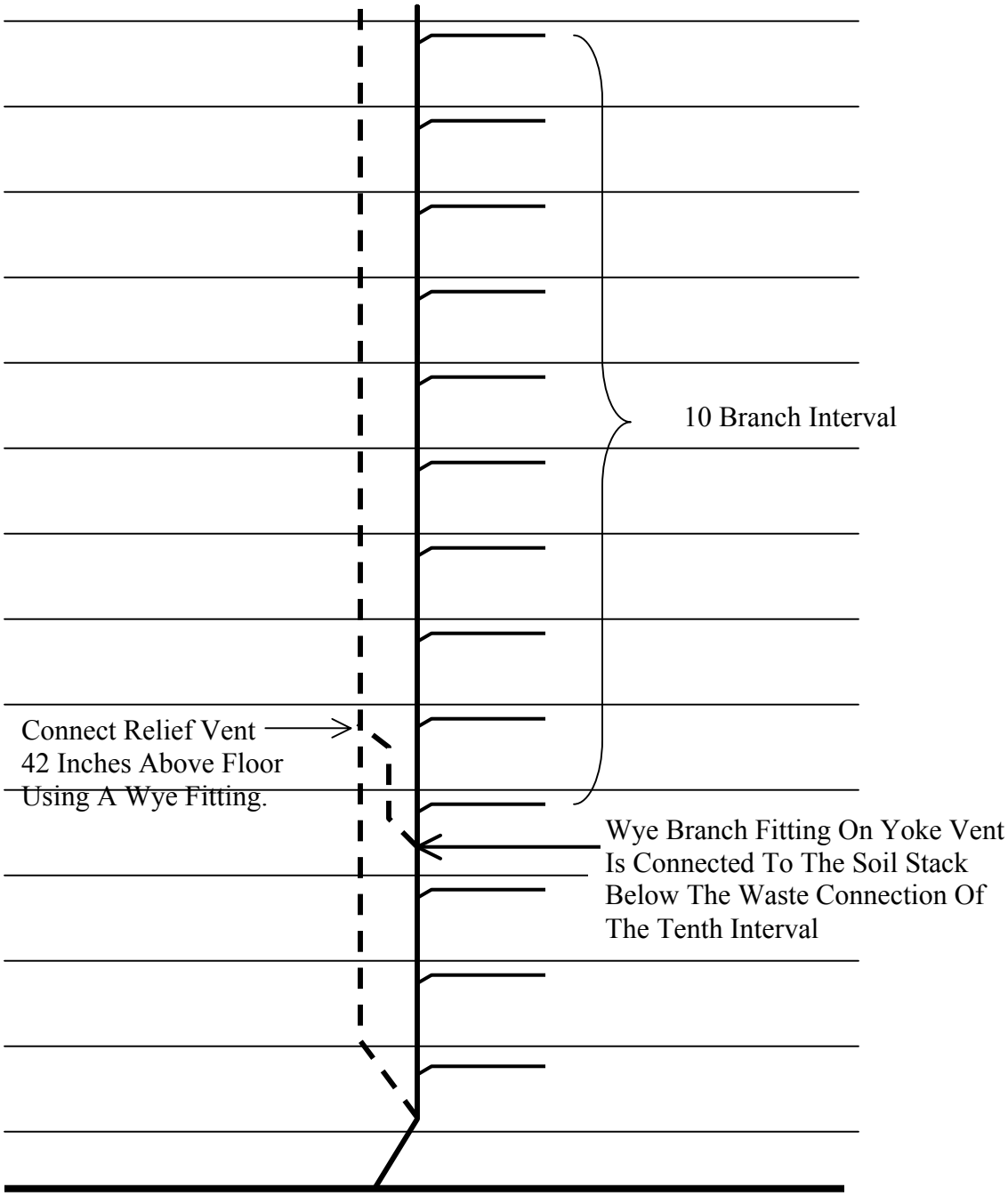

Figure 1316-1

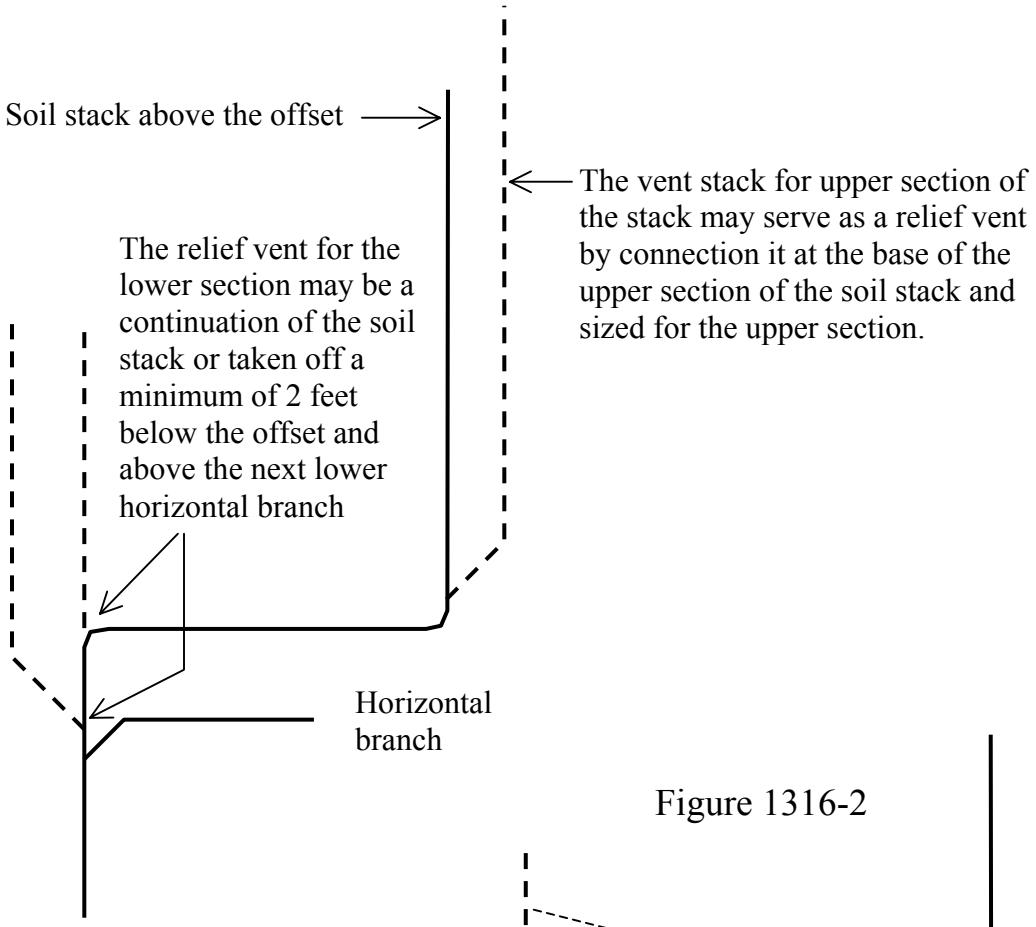

Figure 1316-2

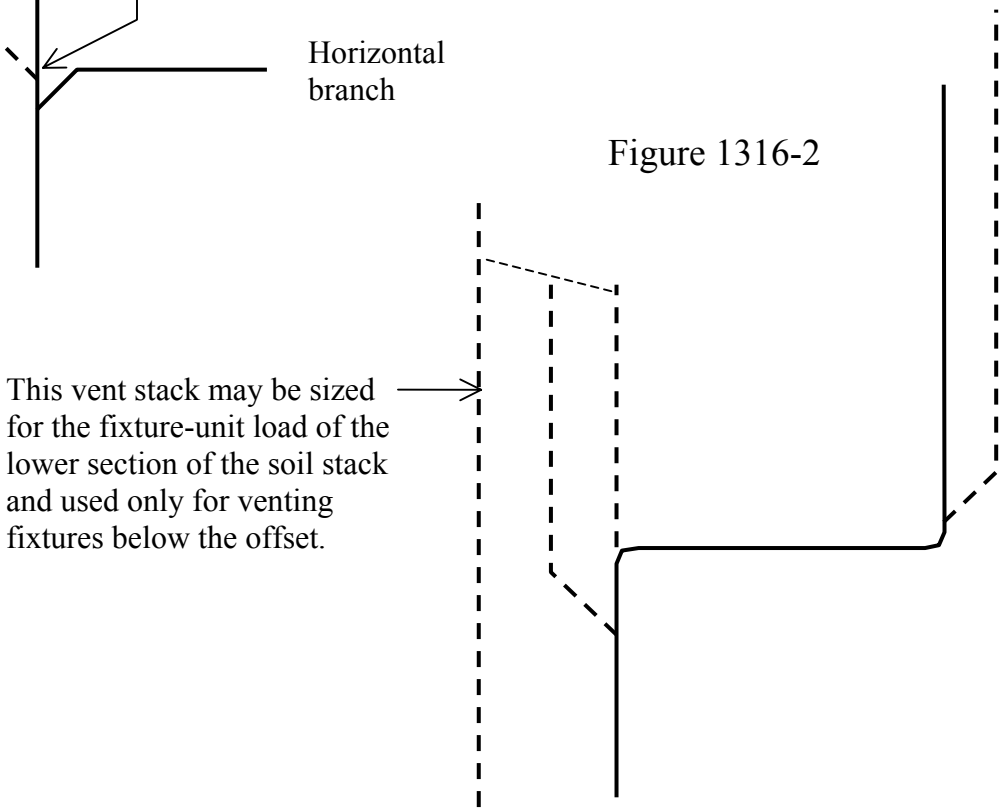

Omaha Plumbing Code
Figure 1316-3

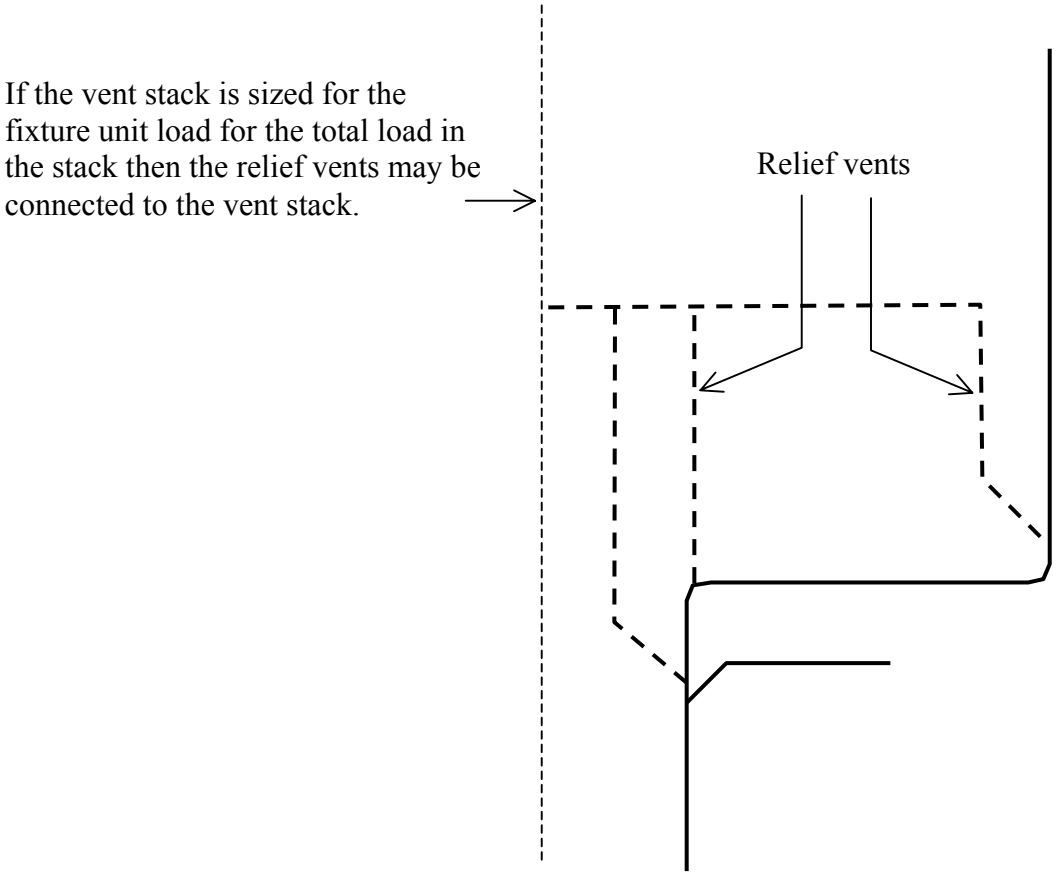

Omaha Plumbing Code
Figure 1320(a)

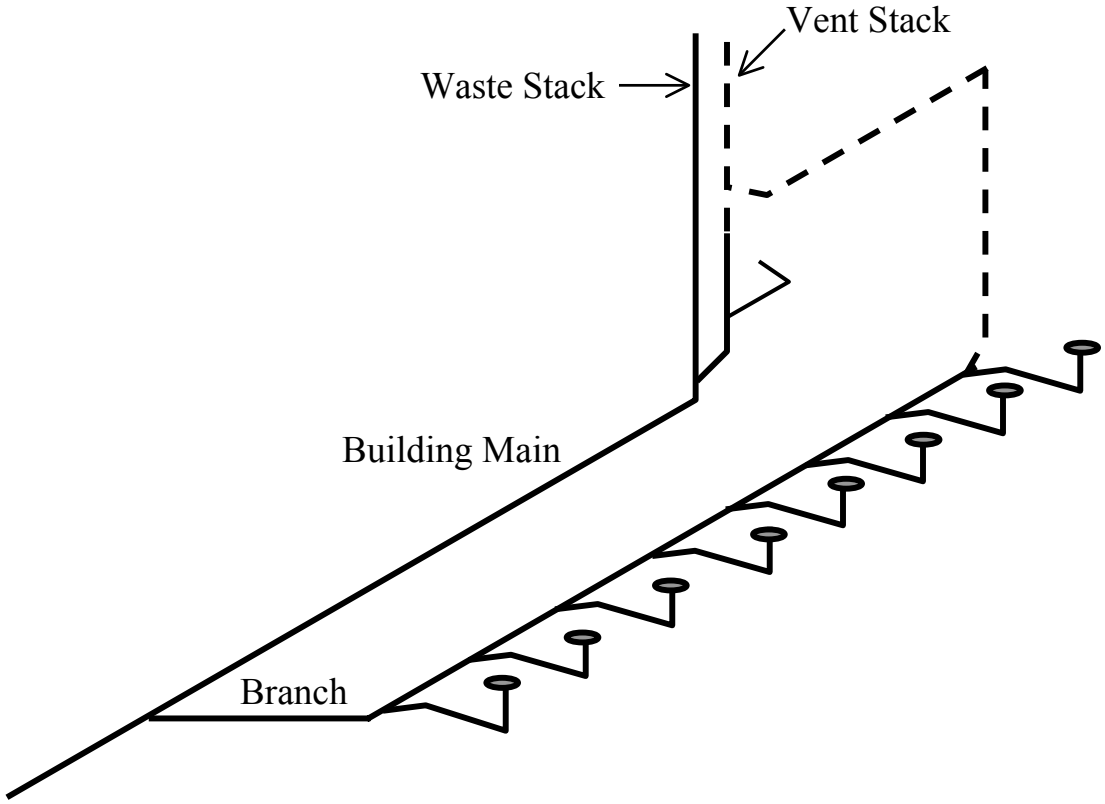

Omaha Plumbing Code
Figure 1320(b)

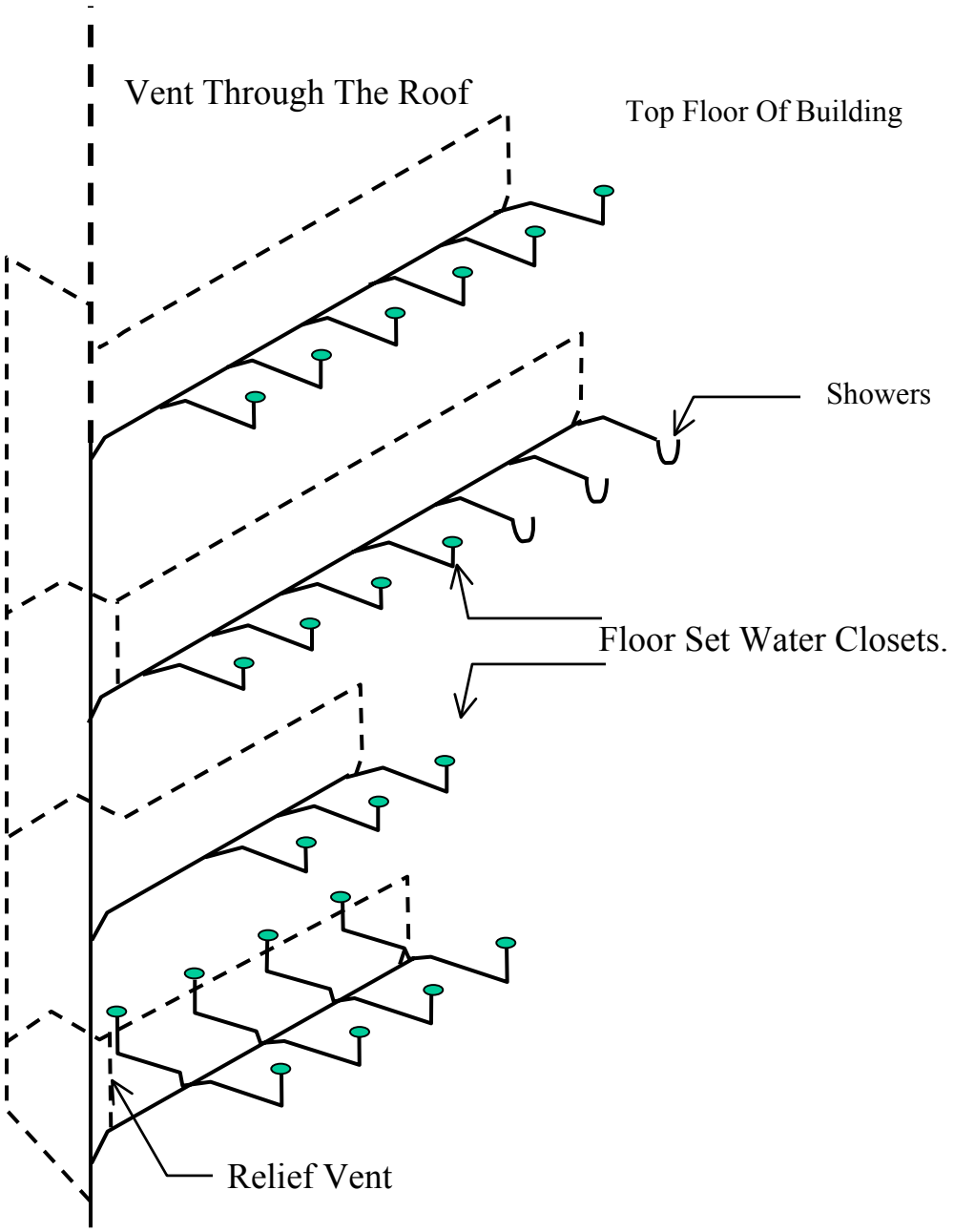

Omaha Plumbing Code
Figure 1320(h)

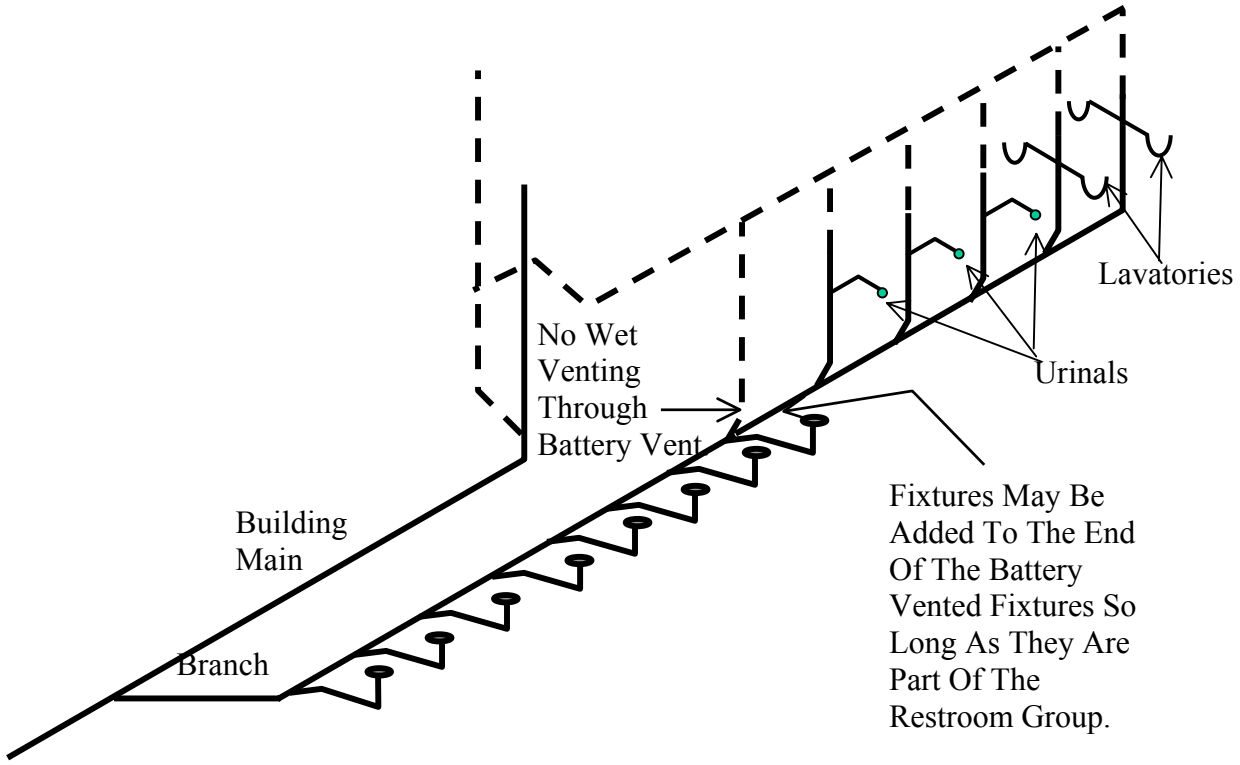

Omaha Plumbing Code
Figure 1322

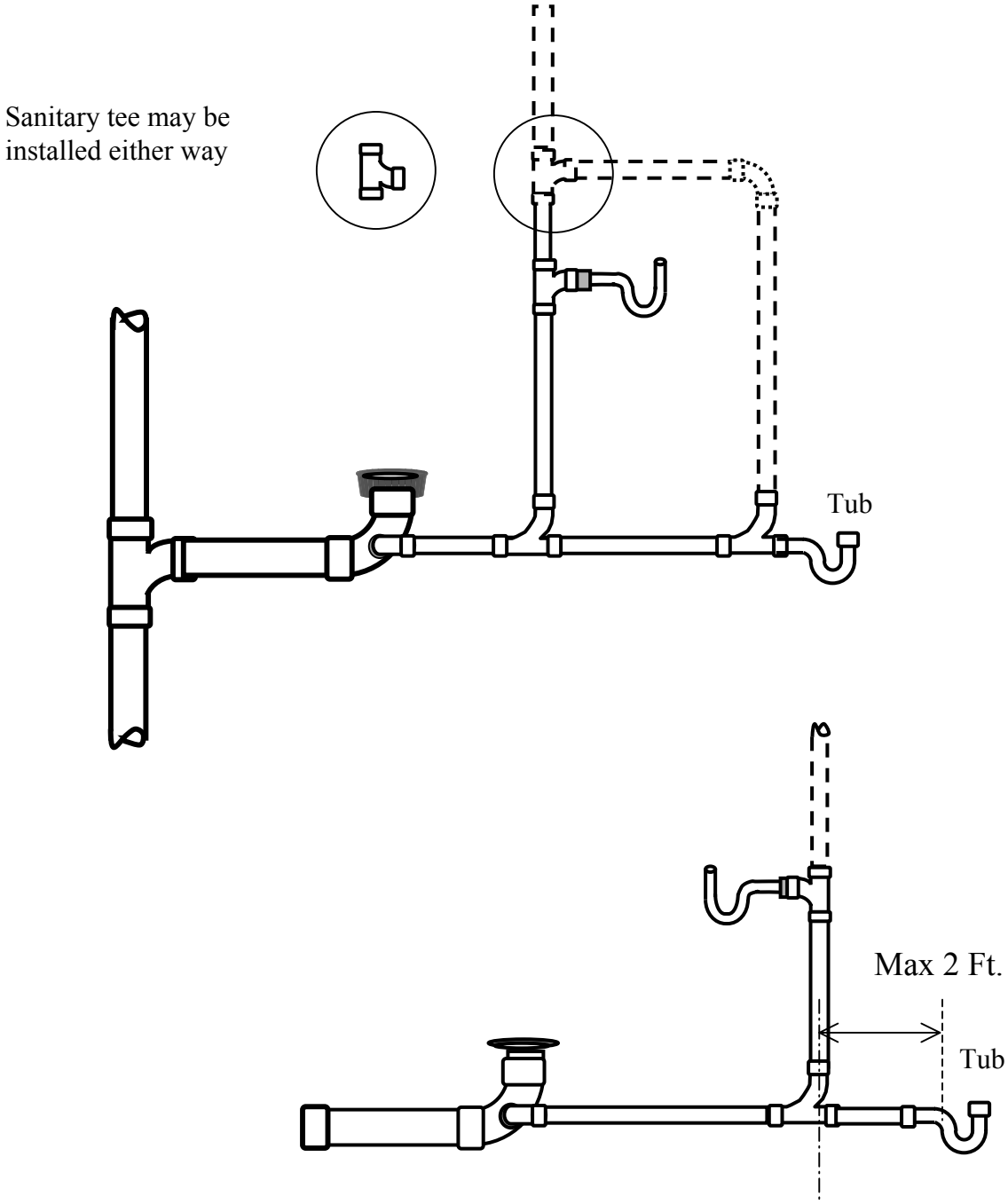

Omaha Plumbing Code
Figure 1400(b)

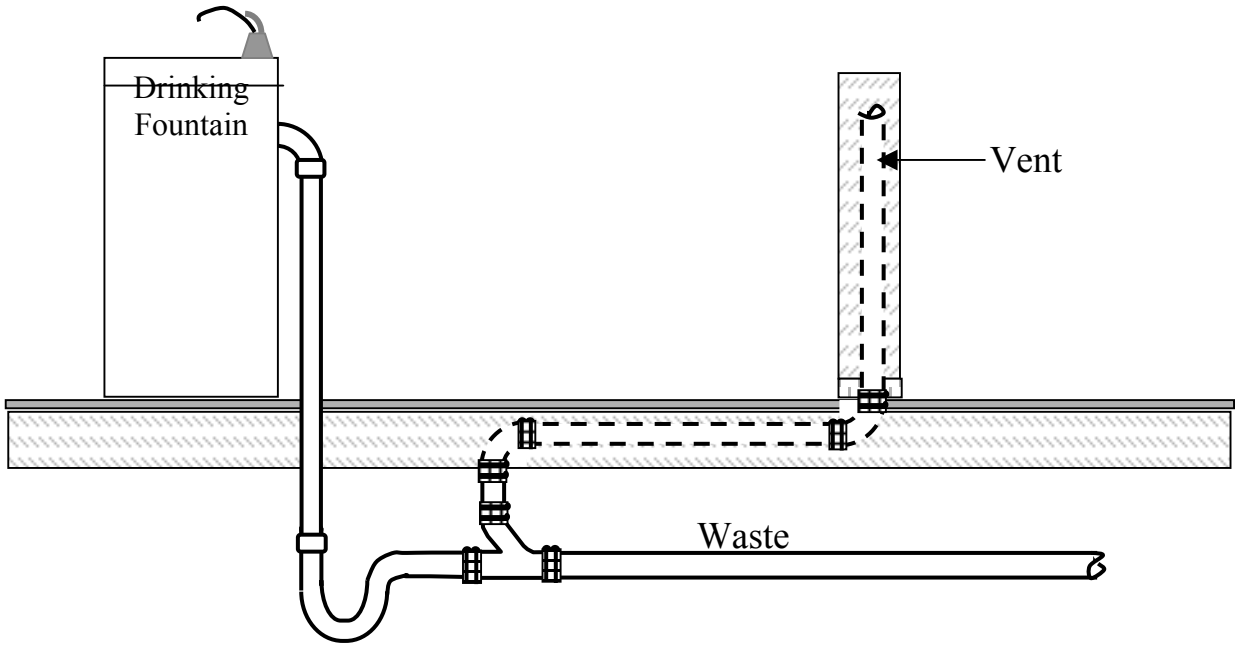

Omaha Plumbing Code
Figure 1406(a)

Back To Back Fixtures Other Than Bathtubs Or Showers

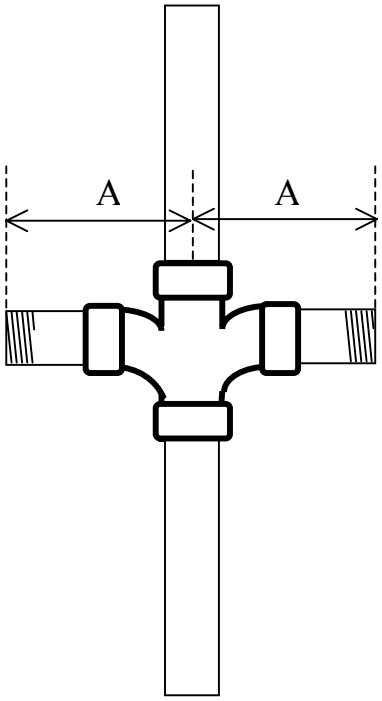

For a 1-1/2" Sanitary Cross A = 4 Inches Or Less
For 2" or 2" x 1-1/2" Cross A = 6 inches Or Less

Combination Wye and
Eighth Bend

Distances As Shown In
Table 1406

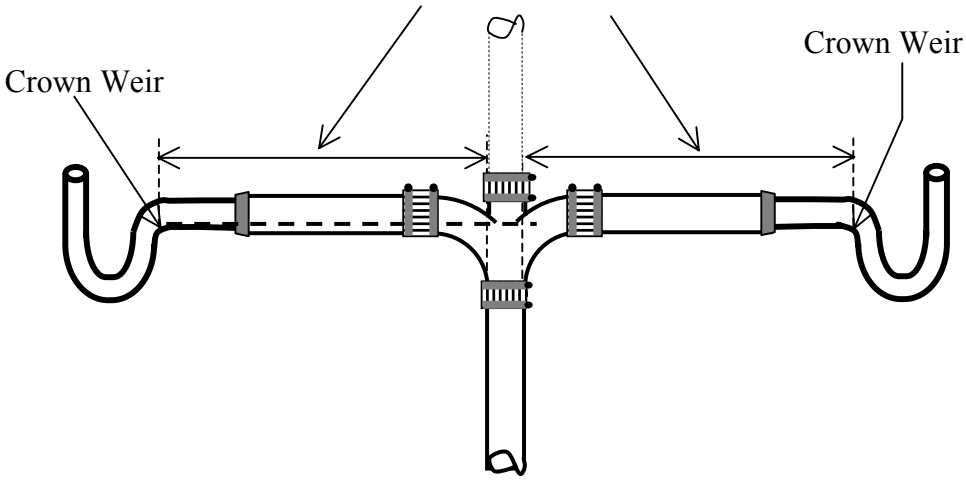

Omaha Plumbing Code
Figure 1407

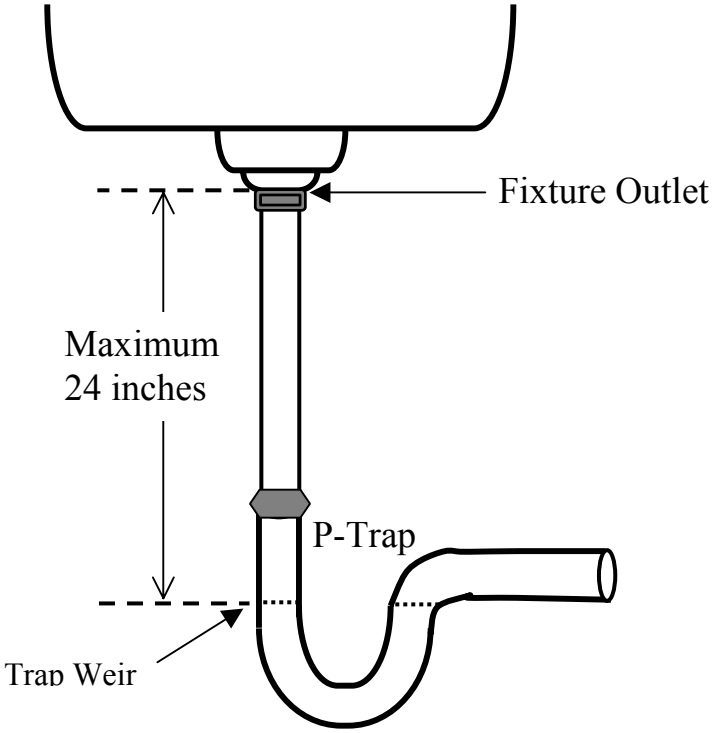

Omaha Plumbing Code
Figure 2006(b) 1

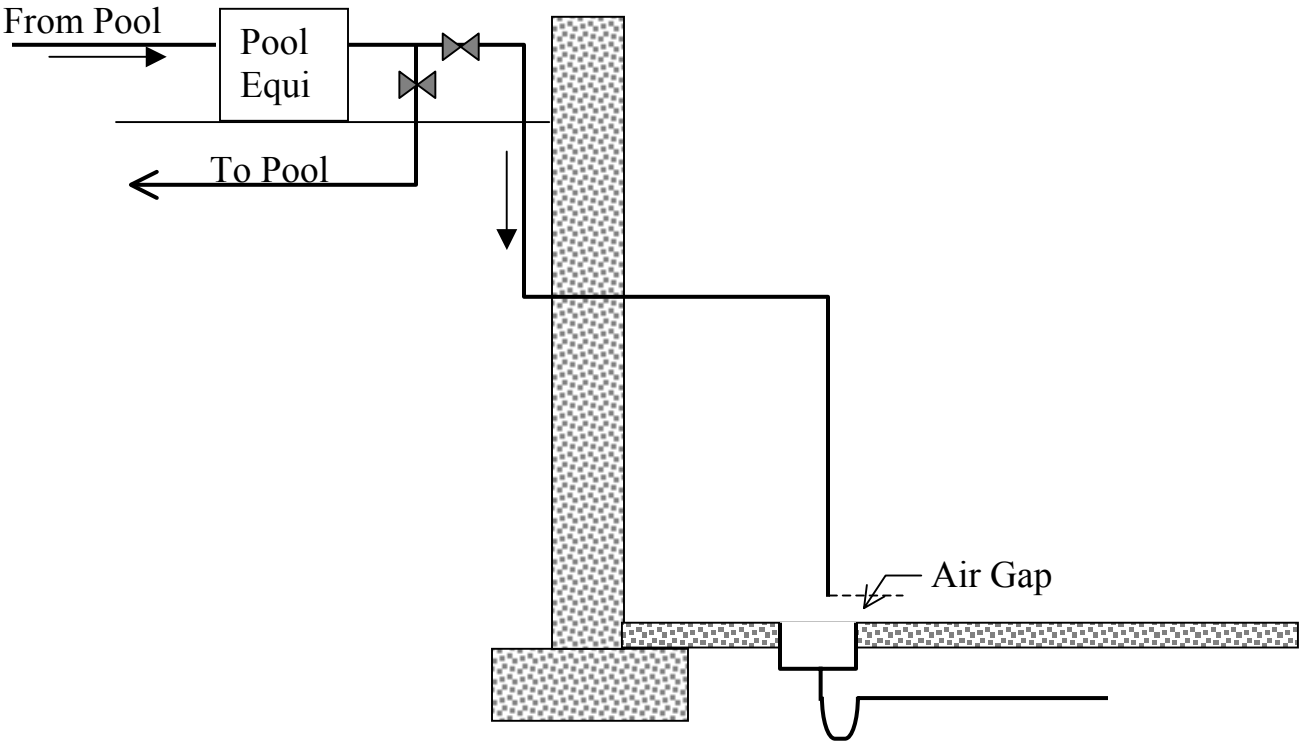

Omaha Plumbing Code
Figure 2006(b) 2

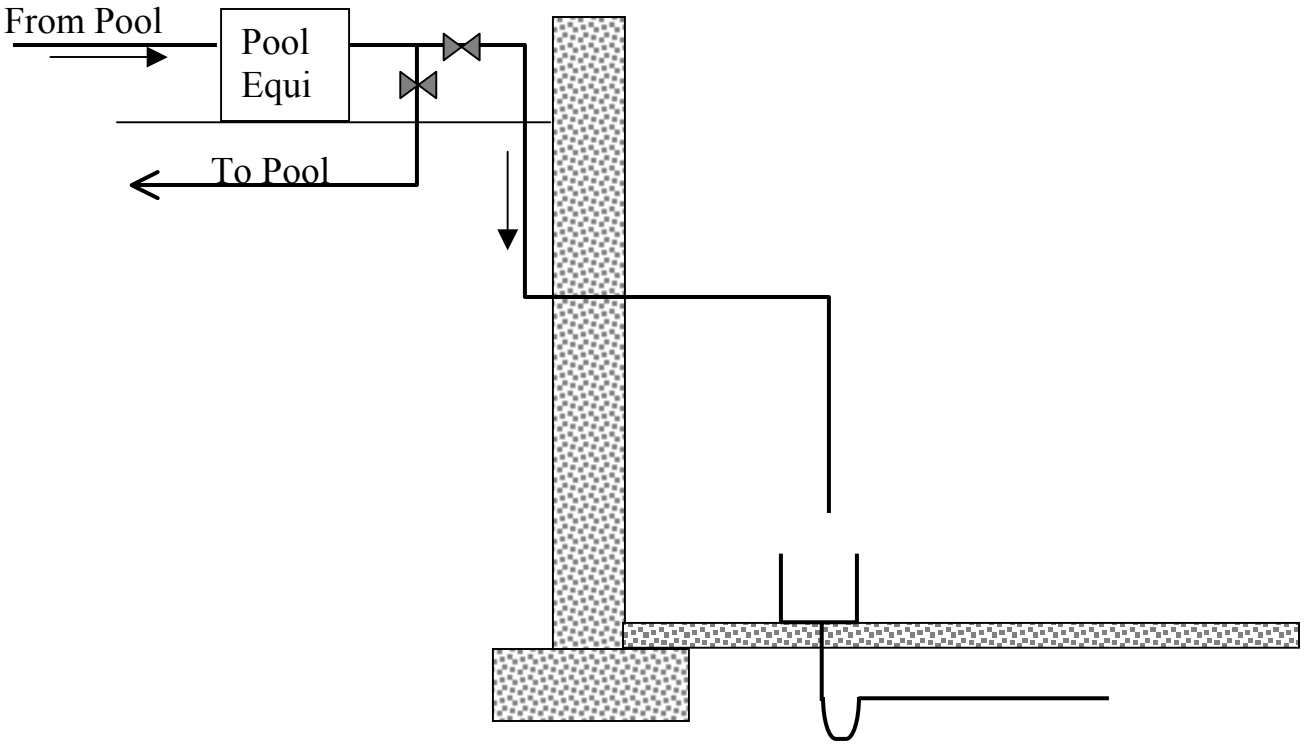

Omaha Plumbing Code
Figure 2006(b) 3

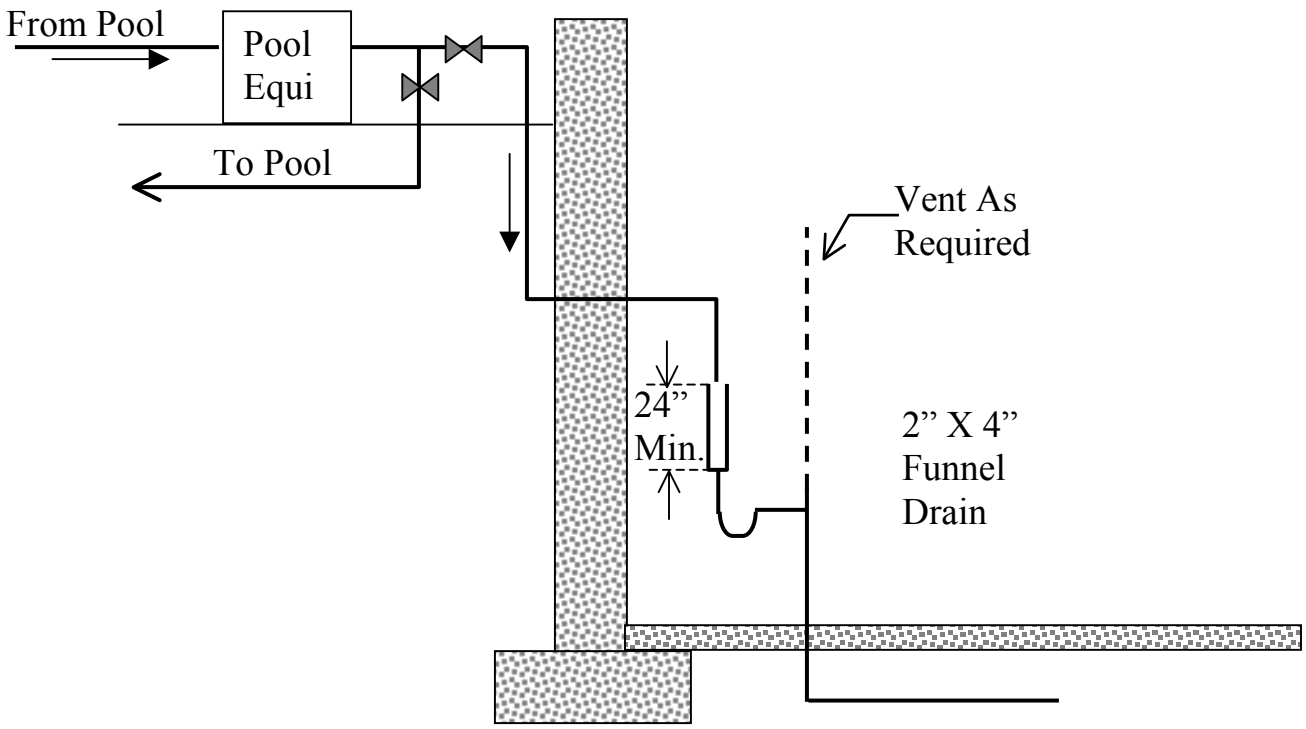

Omaha Plumbing Code
Figure 2111

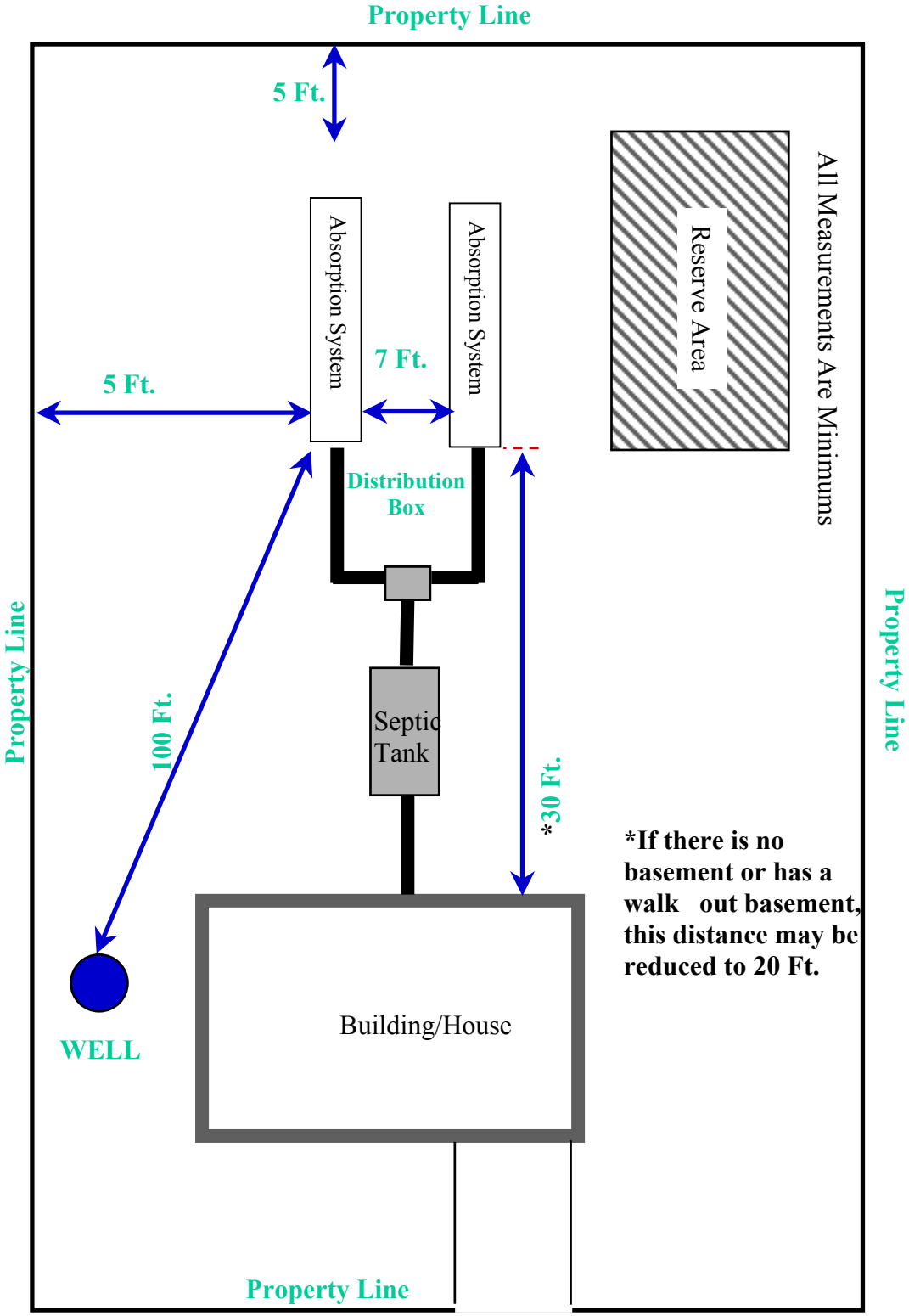

Omaha Plumbing Code
Figure 2115

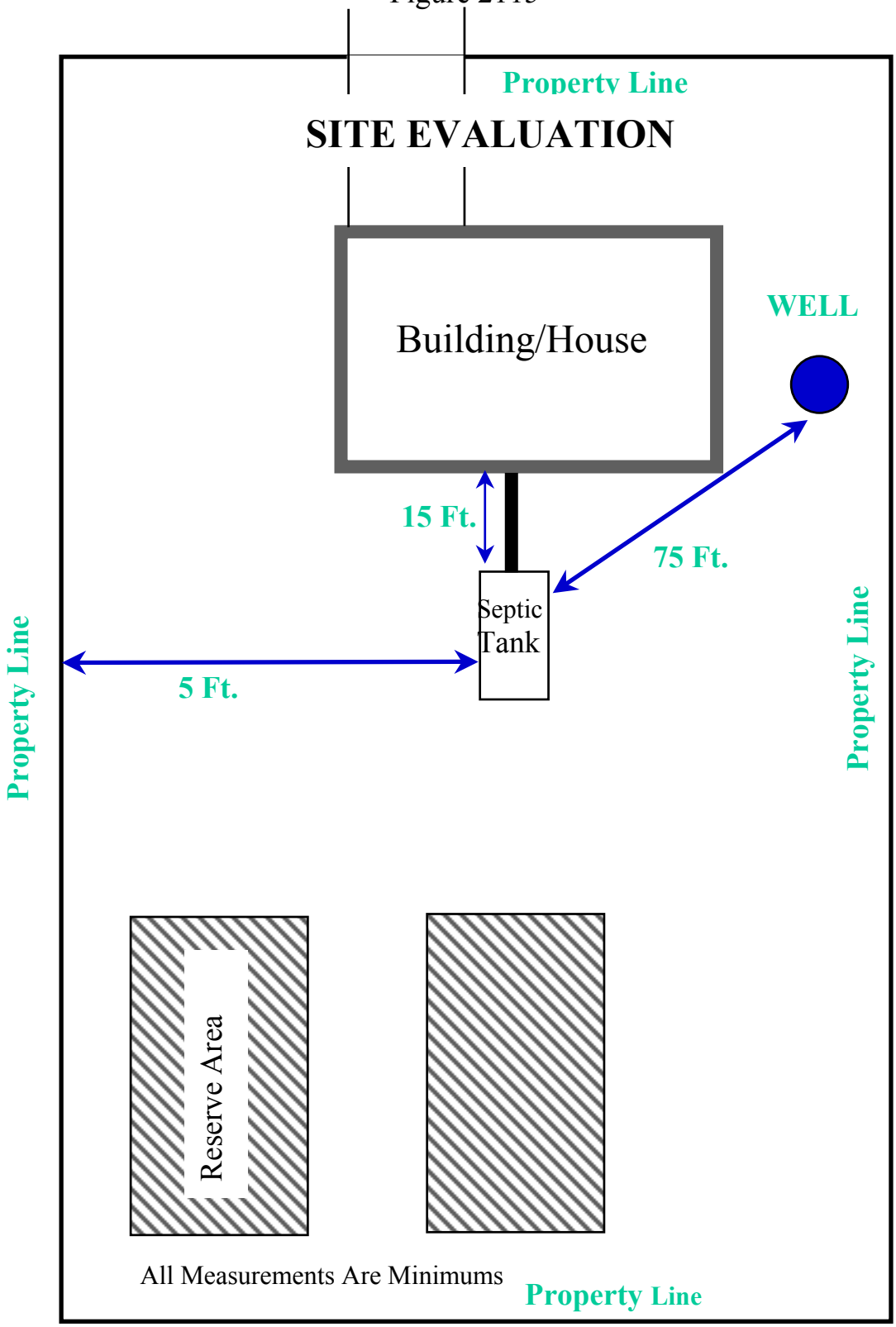

Omaha Plumbing Code
Figure 2117-1

SEPTIC TANK WITH T-BAFFLES

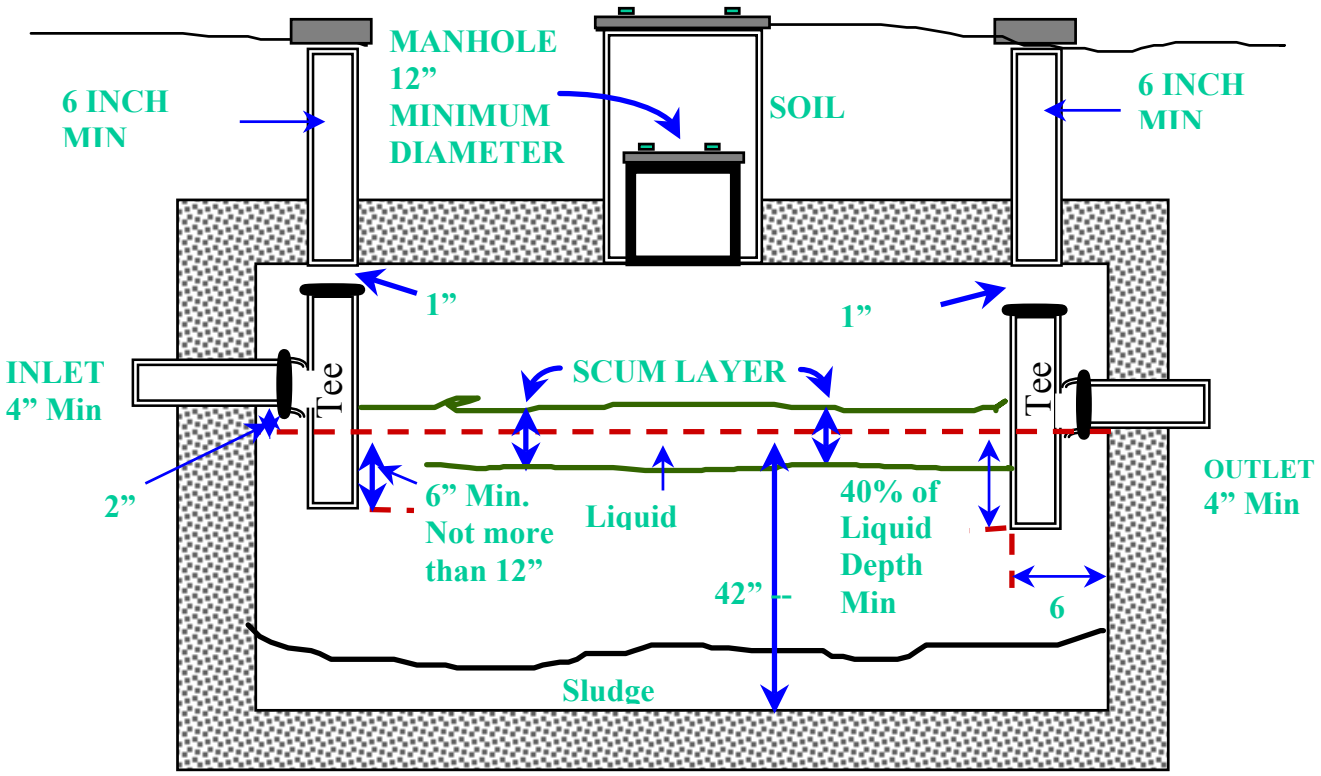

Omaha Plumbing Code
Figure 2117-2

SEPTIC TANK WITH BAFFLES

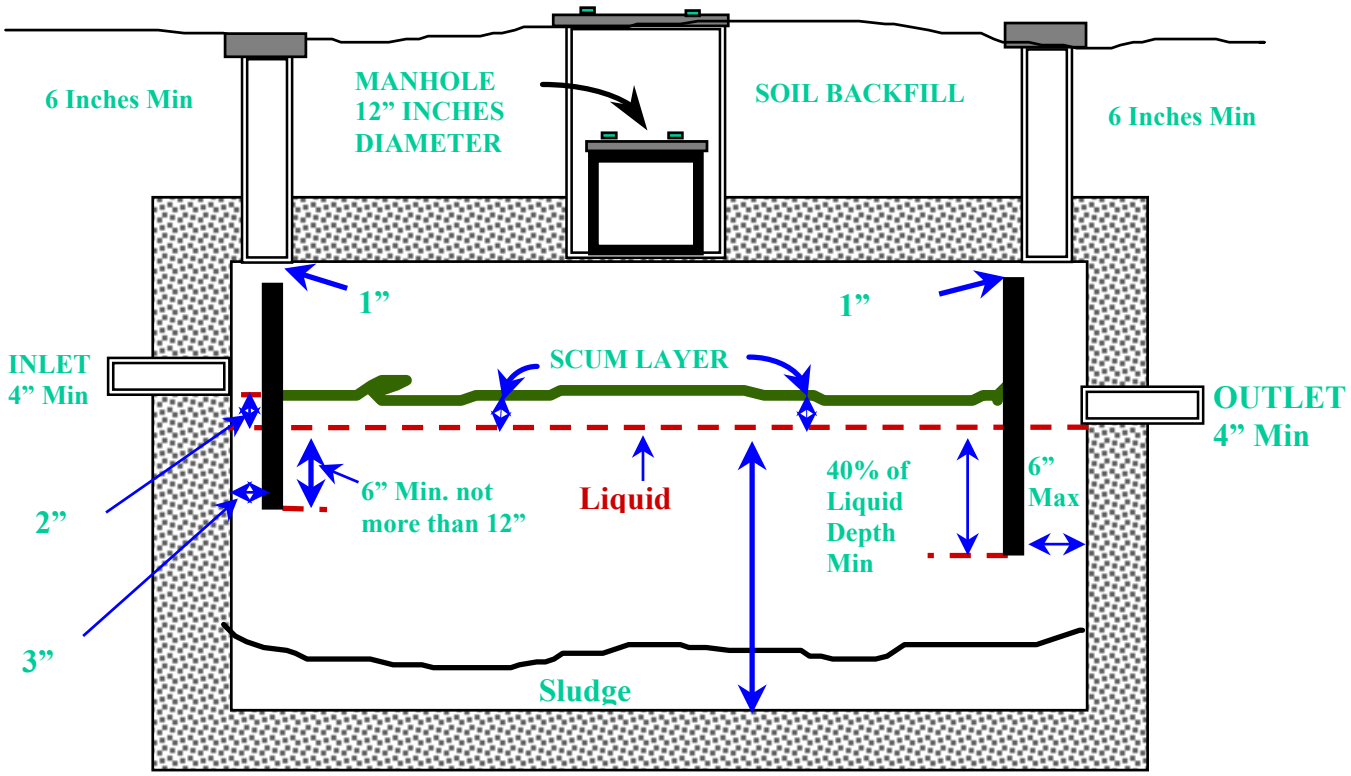

Horizontal Cylindrical Septic Tank

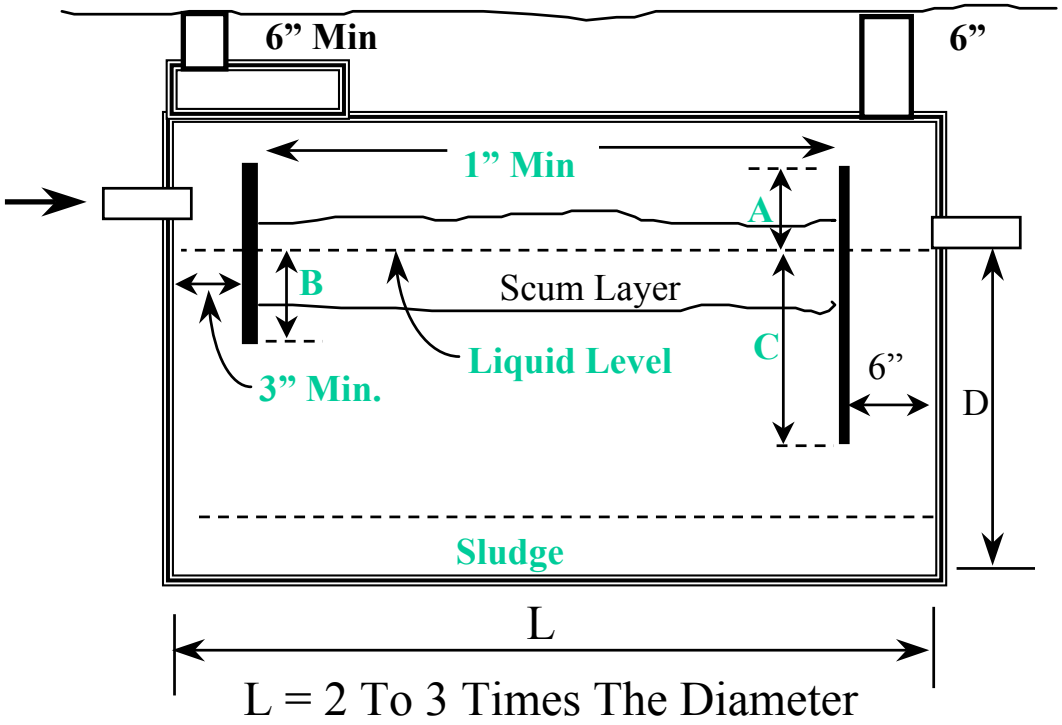

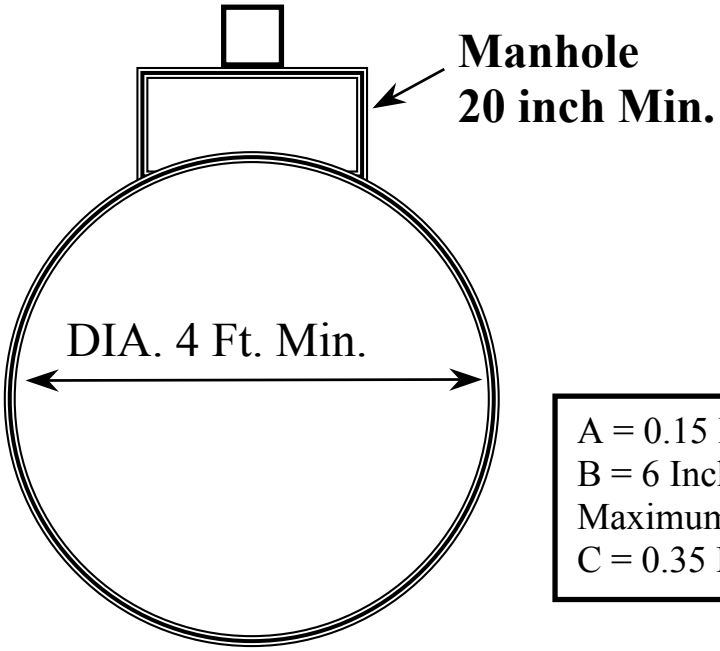

A = 0.15 D
B = 6 Inches Min. 0.2 D Maximum
C = 0.35 D To Nearest Inch

Omaha Plumbing Code
Figure 2119-1

Distribution Box

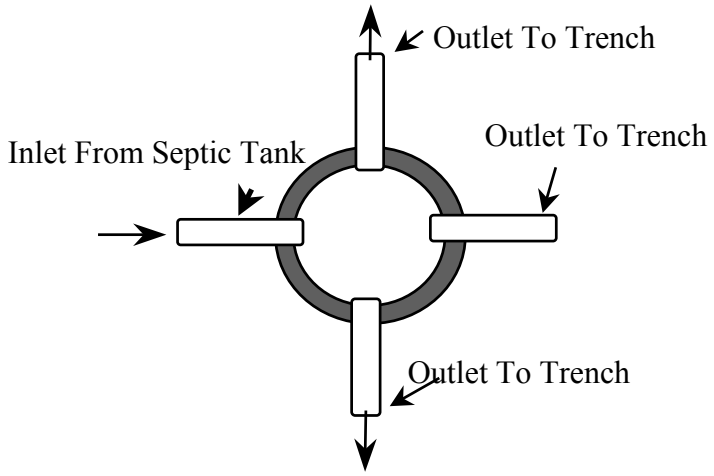

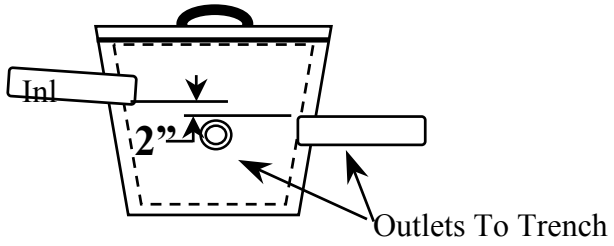

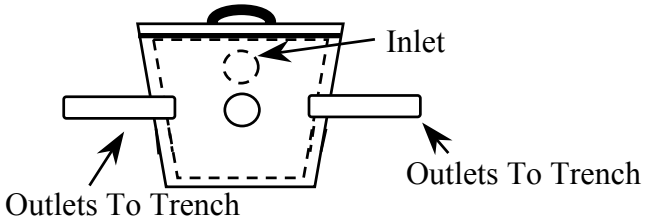

1. All pipes should be at least 4 inch diameter.

2. All of the outlets of the distribution box shall be exactly the same elevation when and after the system has been backfilled.

3. Invert of the inlet must be at least two inches higher than the invert of outlet pipes.

4. The outlet pipes from the distribution shall have equal slopes for five feet after leaving the box.

5. When sewage tank effluent is delivered to the box by a pump, the inlet will be directed so the effluent flows against a side of the box that does not have an outlet.

Omaha Plumbing Code
Figure 2119-2

Drop Box

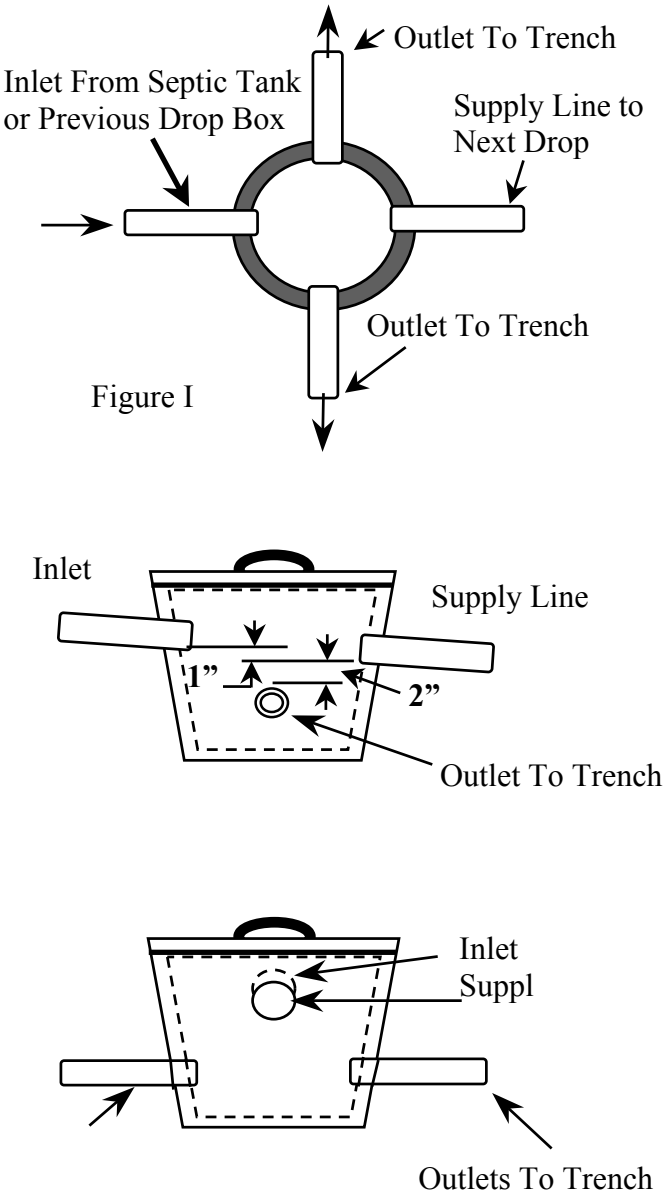

1. **All pipes should be at least 4 inch diameter.**

2. **Elevation of inlet and supply line to next drop box may be adjusted up or down for desired effluent level in trench.**

3. **Invert of inlet must be at least one inch higher than invert of supply pipe to next drop box.**

4. **Trenches may outlet one side or both sides of drop box.**

5. **When sewage tank effluent is delivered to the drop box by a pump, the inlet will be directed so the effluent flows against a side of the box that does not have an outlet.**

SEWER TREATMENT SYSTEM WITH DROP BOXES

SLOPE IS NO RESTRICTION IF
SOIL IS SUITABLE

Drop Box Distribution on Slopes of 45
Degrees or Greater are

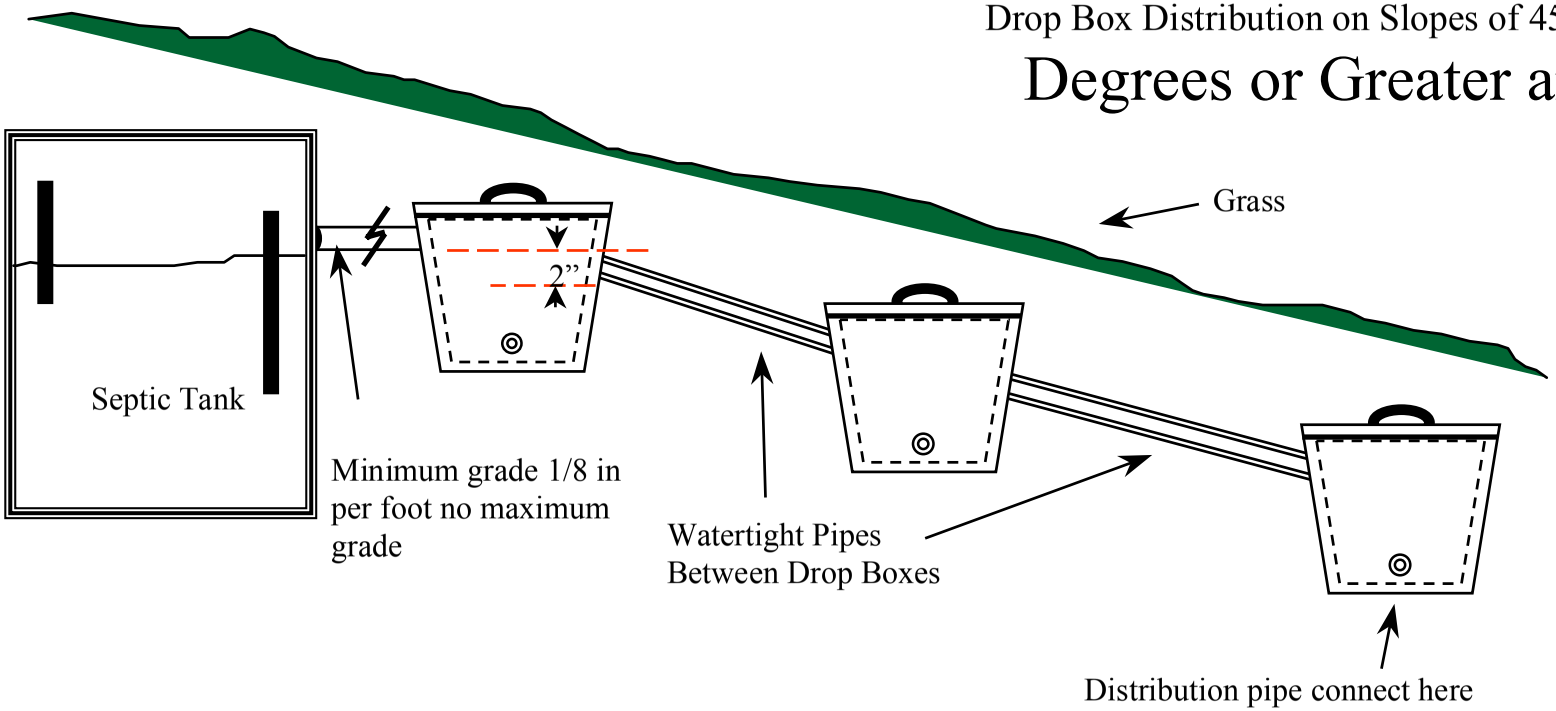

Omaha Plumbing Code
Figure 2119-3

Outlets near the bottom of the drop box connect to the distribution pipe of the trenches. Another outlet near the top of the drop box connects to a water tight pipe leading to the drop box of the next

Omaha Plumbing Code
Figure 2129-1

Filter Material With 4 Inch Perforated Pipe

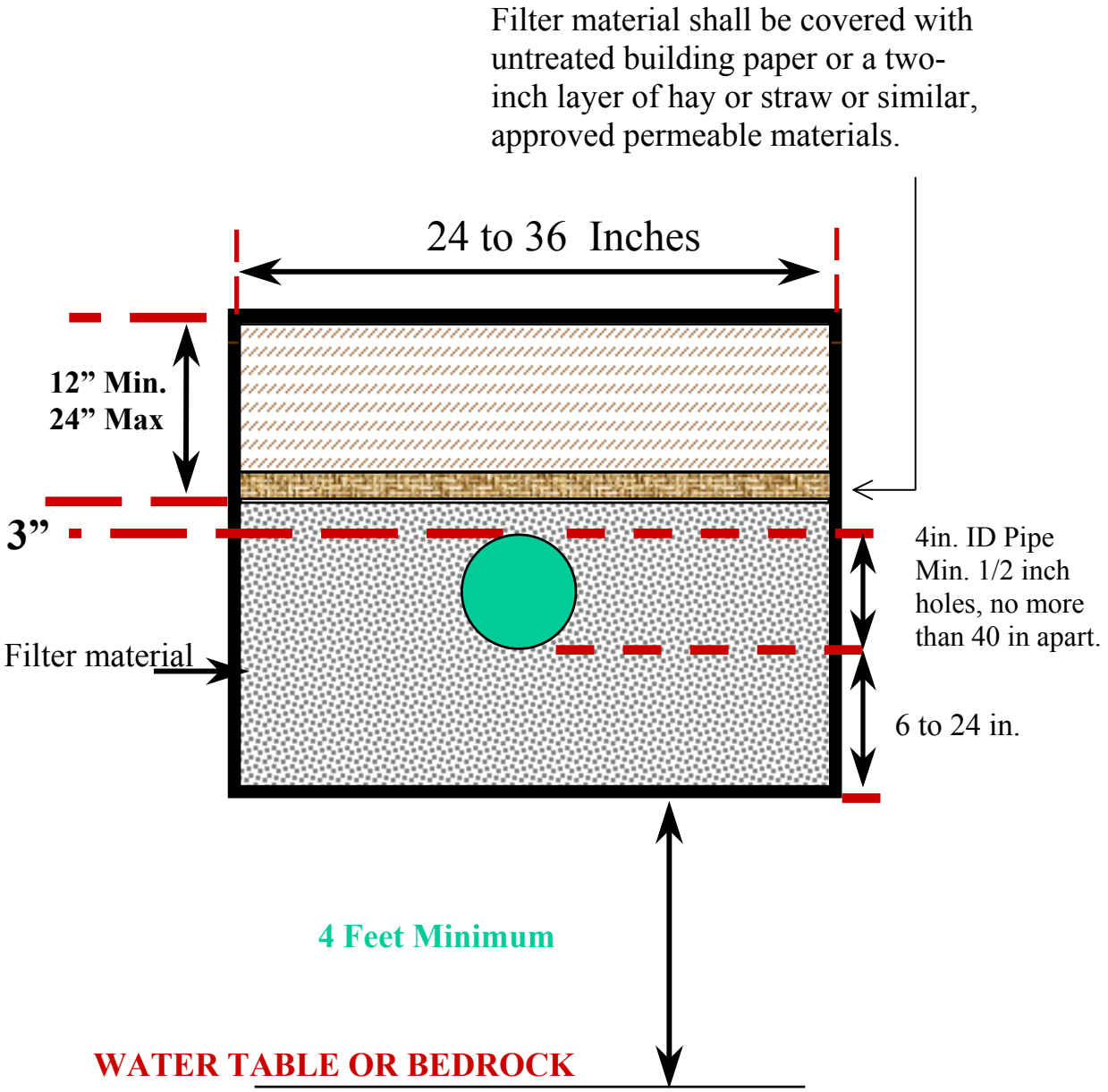

Omaha Plumbing Code
Figure 2129-2

Filter Material And Chambers

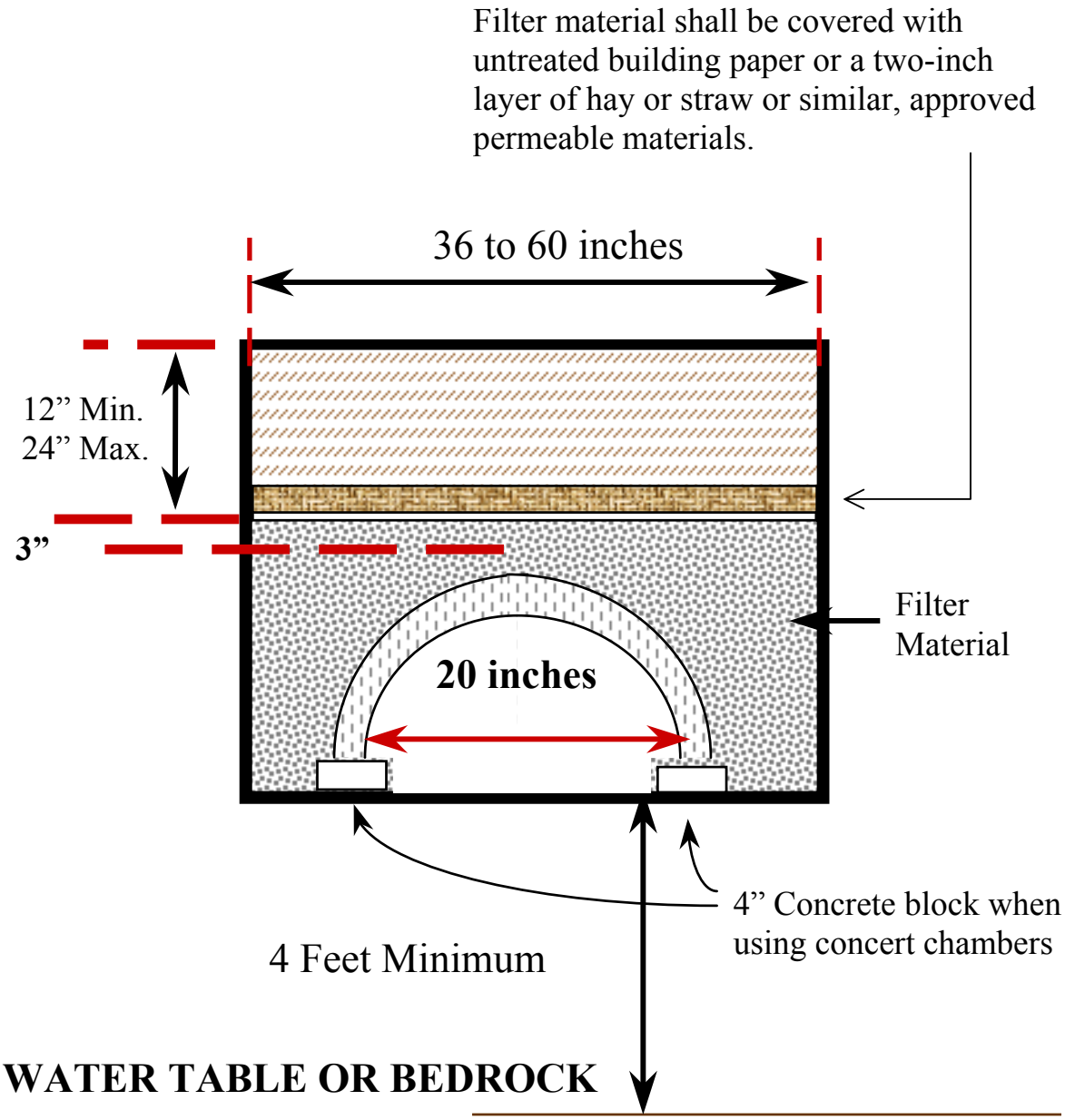

Omaha Plumbing Code
Figure 2129-3

Filter Material And Chambers
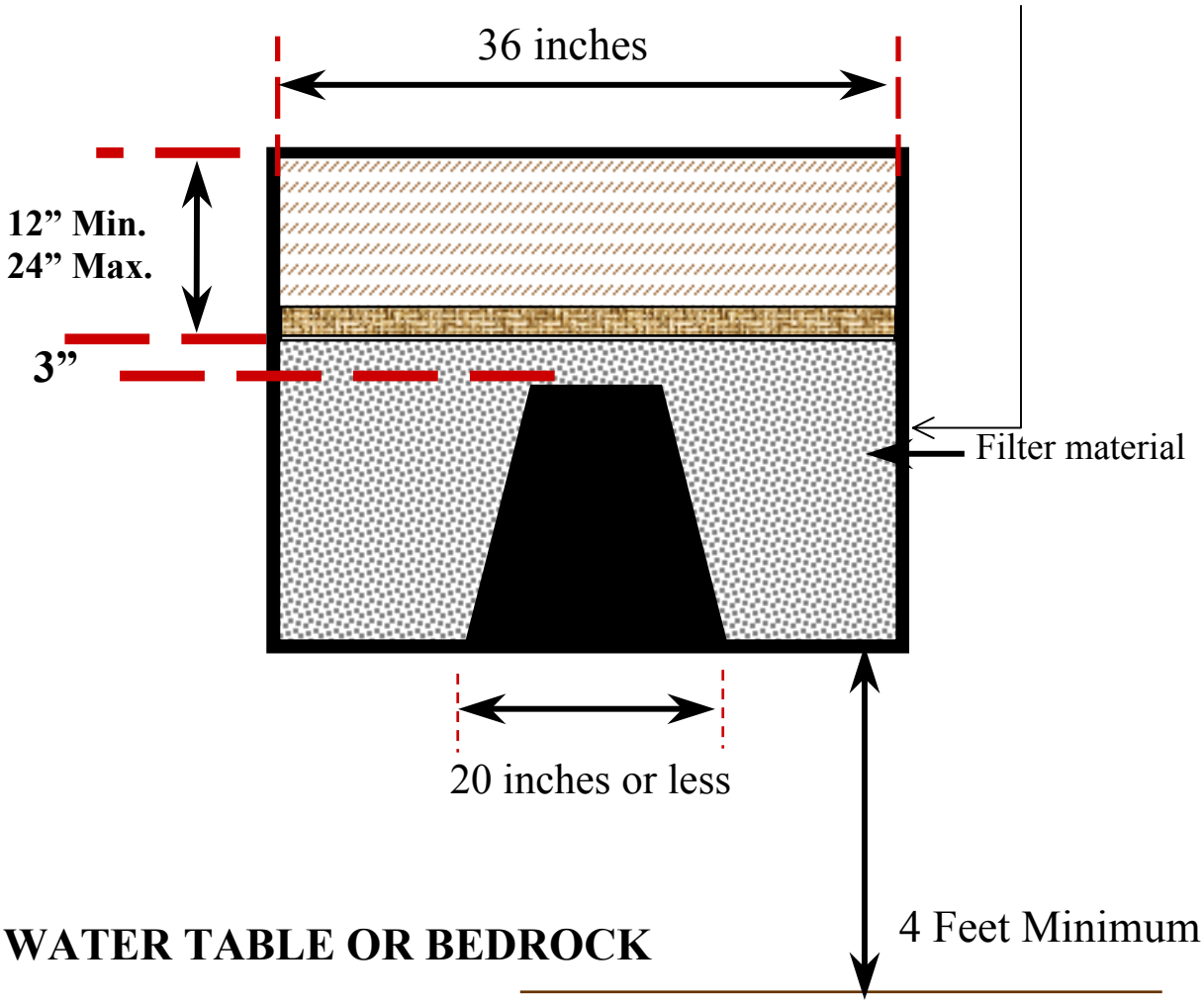
Filter material shall be covered with untreated building paper or a two-inch layer of hay or straw or similar, approved permeable materials.